MEG Series

CPU Cooler

MEG CORELIQUID E15 360

User Guide

English \ Deutsch \ Français \ Русский \ Polski \ Português \
BR Portuguese \ Español \ Türkçe \ Dansk \ Nederlands \
Norsk \ Česky \ Ελληνικά \ Svenska \ Suomi \ Magyar \
Italiano \ Қазақ тілі \ 繁體中文 \ 簡体中文 \ 日本語 \ 한국어 \
Tiếng Việt \ ไทย \ Bahasa Indonesia \ Українська \ Română \
Slovensky \ Bosanski \ Български \ Latviešu \ Srpski \
Slovenščina \ Lietuvių \ Hrvatski \ Eesti \ বাংলা \ हिन्दी \
العربية \ فارسی

The warranty term differs from one region to another. If you would like to verify the warranty term of the product bought, please kindly contact our local offices.

Die Garantieleistungen unterscheiden sich nach der jeweiligen Region. Wenn Sie die Garantiezeit des gekauften Produkts überprüfen möchten, wenden Sie sich bitte an unsere lokalen Niederlassungen.

Les termes et conditions de la garantie peuvent varier selon les pays. Pour vérifier les termes et conditions qui s' appliquent à votre pays, veuillez vous rendre sur le site MSI local.

Условия гарантийного обслуживания могут меняться в зависимости от региона продаж. Для уточнения условий гарантийного обслуживания, пожалуйста, свяжитесь с местным представителем компании.

Okres gwarancyjny zależy od regionu. W celu sprawdzenia okresu gwarancyjnego dla zakupionego produktu należy skontaktować się z jednym z naszych lokalnych biur.

O prazo de garantia difere de acordo com a região. Se deseja verificar o prazo de garantia do produto adquirido, contacte os nossos representantes locais.

Os termos de garantia diferem de uma região para outra. Caso deseje verificar o termo de garantia do produto comprado, por favor, entre em contato com nossos escritórios locais.

El plazo de garantía cambia de una región a otra. Si desea verificar la duración de la garantía del producto comprado, comuníquese con nuestras oficinas locales.

Garanti süresi bir bölgeden diğerine farklılık gösterir. Satın alınan ürünün garanti süresini doğrulamak istiyorsanız, lütfen yerel ofislerimizle iletişime geçin.

Garantiperioden er forskellig fra region til region. Hvis du vil bekræfte garantiperioden til det købte produkt, bedes du venligst kontakte vores lokale kontorer.

De garantie varieert tussen regio's. Als u de garantievoorwaarde van het aangeschafte product wilt verifiëren, neem dan contact op met ons lokale kantoor.

Garantiperioden varierer avhengig av region. Hvis du vil bekrefte garantitiden for produktet som er kjøpt, kan du ta kontakt med våre lokale kontorer.

Záruční podmínky se liší podle oblasti. Chcete-li si ověřit záruční dobu zakoupeného produktu, kontaktujte naše místní pobočky.

Η περίοδος της εγγύησης διαφέρει από περιοχή σε περιοχή. Αν θέλετε να επαληθεύσετε την περίοδο εγγύησης του προϊόντος που αγοράσατε, παρακαλείστε όπως επικοινωνήσετε με τα τοπικά μας γραφεία.

Garantitiden skiljer sig från region till region. Om du vill verifiera garantitiden för den köpta produkten är du välkommen att kontakta våra lokala kontor.

Takuuehdot vaihtelevat alueittain. Jos haluat tarkistaa ostetun tuoteen takuuehdot, ota yhteyttä paikalliseen toimistoomme.

A garanciális időszak régiónként eltérő. Ha ellenőrizni szeretné a megvásárolt termékre vonatkozó garancia időszakát, arra kérjük, hogy vegye fel a kapcsolatot a helyi irodáinkkal.

Il termine della garanzia differisce da una regione all'altra. Se si desidera verificare la durata della garanzia del prodotto acquistato, si prega gentilmente di contattare i nostri uffici locali.

Кепілдік мерзімі аймаққа байланысты ерекшеленеді. Сатып алынған тауардың кепілдік мерзімін тексергіңіз келсе, біздің жергілікті кеңселеімізге хабарласыңыз.

保固期因地區而異。如果您想確認所購買產品的保固期，請聯繫我們當地的營運處。

本公司产品保修期因地区而异。如果您想核实所购买产品的保修期，请联系我们当地的办事处。

保証期間は地域により異なりますので、購入した製品の保証期間を確認する場合は、その地域のMSIオフィスにお尋ねください。

제품 보증 기간은 구매 지역에 따라 다릅니다. 구매한 제품의 보증기간 확인은 해당 지역 고객지원센터에 문의바랍니다.

Thời hạn bảo hành sẽ khác nhau tùy theo từng khu vực. Nếu bạn muốn xác minh thời hạn bảo hành của sản phẩm đã mua, vui lòng liên hệ đến các văn phòng tại địa phương của chúng tôi.

เงื่อนไขการรับประกันแตกต่างกันในแต่ละภูมิภาค ถ้าคุณต้องการตรวจสอบเงื่อนไขการรับประกันของผลิตภัณฑ์ที่ซื้อมา โปรดติดต่อสำนักงานในพื้นที่ของเรา

Masa garansi berbeda antara satu wilayah dengan wilayah lain. Jika Anda ingin memverifikasi masa garansi produk yang dibeli, silakan hubungi kantor lokal kami.

Термін гарантії відрізняється в різних регіонах. Щоб перевірити термін гарантії на придбаний виріб, зверніться до місцевого відділення нашої компанії.

Termenul de garanție diferă de la o regiune la alta. Dacă doriți să verificați termenul de garanție al produsului achiziționat, vă rugăm să contactați birourile noastre locale.

Záručné podmienky sa líšia od jedného regiónu po druhý. Ak si chcete overiť záručné podmienky na zakúpený výrobok, obráťte sa láskavo na naše miestne pobočky.

Trajanje garancije razlikuje se zavisno o regiji. Ako želite potvrditi trajanje garancije kupljenog proizvoda, obratite se lokalnom uredu.

Гаранционният срок се различава от регион на регион. Ако искате да проверите гаранционния срок на продукта, който сте закупили, свържете се с нашите местни офиси.

Garantijas termiņš dažādos reģionos atšķiras. Ja vēlaties pārbaudīt iegādātā produkta garantijas termiņu, lūdzu, sazinieties ar mūsu vietējiem birojiem.

Trajanje garancije se razlikuje u zavisnosti od regije. Ako želite da potvrdite trajanje garancije za proizvod koji ste kupili, obratite se našoj lokalnoj kancelariji.

Garancijski pogoji se med regijami razlikujejo. Če želite preveriti garancijske pogoje za kupljen izdelek, se obrnite na eno od naših izpostav.

Įvairiuose regionuose taikomos skirtingos garantinės sąlygos. Jei norite įsitikinti, kokios garantinės sąlygos taikomos jūsų įsigytam į gaminiui, kreipkitės į mūsų artimiausią klientų aptarnavimo biurą.

Valjanost jamstva razlikuje se ovisno o regiji. Ako želite potvrditi valjanost jamstva kupljenog proizvoda, obratite se lokalnom uredu.

Garantiitingimused on regiooniti erinevad. Ostetud toote garantiitingimuste üle vaatamiseks pöörduge meie kohaliku esinduse poole.

ওয়ারেন্টির শর্ত অঞ্চল ভেদে ভিন্ন ভিন্ন হতে পারে। আপনি যদি ক্রয়কৃত পণ্যের ওয়ারেন্টির শর্তাবলি যাচাই করতে চান, তাহলে আমাদের স্থানীয় অফিসের সাথে যোগাযোগ করুন।

वारंटी की अवधि एक प्रदेश से दूसरे में भिन्न होती है। यदि आप खरीदे गए उत्पाद की वारंटी अवधि का सत्यापन करना चाहते हैं, तो कृपया हमारे स्थानीय कार्यालयों से संपर्क करें।

تختلف مدة الضمان من منطقة إلى أخرى. إذا كنت ترغب في التحقق من مدة الضمان للمنتج الذي تم شراؤه يرجى التكرم بالاتصال بمكاتبنا المحلية

شرایط ضمانت در هر منطقه متفاوت است. اگر می خواهید شرایط ضمانت محصول خریداری شده را بررسی کنید، لطفاً با دفاتر محلی ما تماس بگیرید

Packing Contents

Lieferumfang \ Contenu de \ l'emballage \ Комплект поставки \ Zawartość \ akowania Conteúdo da embalagem \ Conteúdo da Embalagem \ Contenido del paquete \ Paket İçeriği \ Pakkens indhold \ Inhoud verpakking \ Pakkens innhold \ Obsah krabice \ Περιεχόμενα συσκευασίας \ Förpackningens innehåll \ Pakkauksen Sisältö \ A csomag tartalma \ Contenuto della confezione \ Қаптаманың Мазмұны \ 包装內容 \ 包装内容 \ パッケージの内容 \ 포장 내용물 \ Cấu phần trong gói \ รายการในกล่องบรรจุ \ Isi Kemasan \ До Комплекту Входять Conţinutul Pachetului \ Obsah Balenia \ Sadržaj pakovanja \ Съдържание на пакета \ Iepakojuma saturs \ Sadrħaj Paketa \ Vsebina paketa \ Pakuotės turinys \ Sadržaj pakiranja \ Pakendi sisu \ জিনিস প্যাকেটজাত করা \ पैकिंग सामग्री \ محتويات العبوة \ موارد موجود در بسته بندی

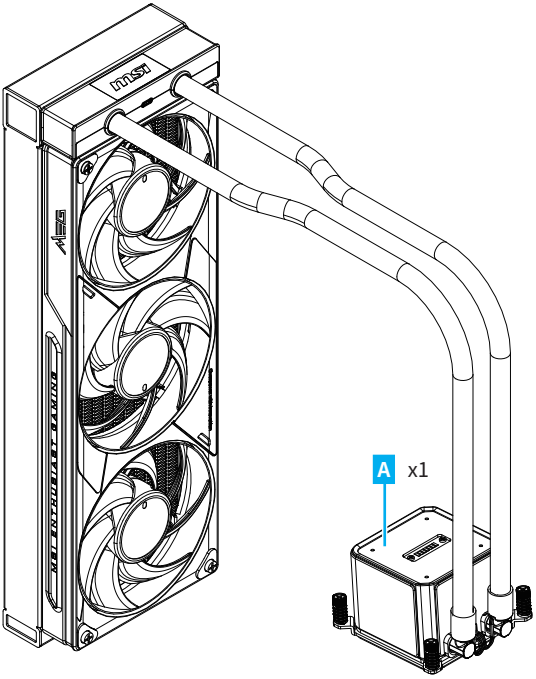

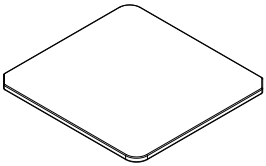

B x1

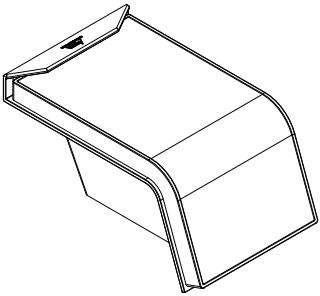

C x1

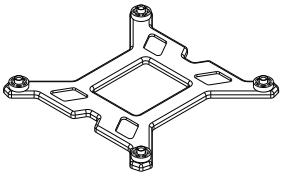

D x1 (Intel)

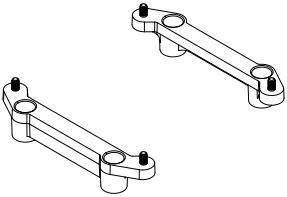

E x1 (AMD)

F x4 (Intel Screw)

G x12

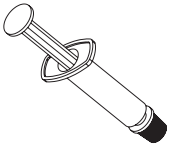

H x1

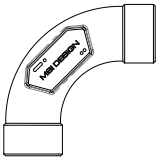

I x2

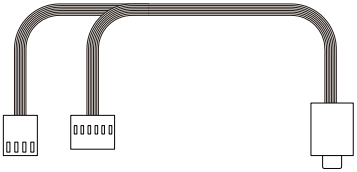

J x1

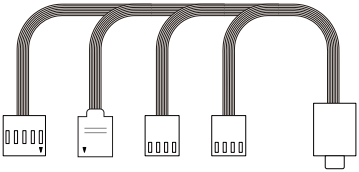

K x1

Installation

Installieren \ Installation \ Установка \ Instalacja \ Instalação \ Instalação \ Instalación \ Kurulumu \ Installation \ Installeren \ Installasjon \ Instalace \ Εγκατάσταση \ Installation \ Asennus \ Üzembe helyezés \ Installazione \ Орнату \ 安裝 \ 安装 \ 設置 \ 설치 \ Lắp đặt \ การติดตั้ง \ Penginstalan \ Установка \ Instalare \ Inštalácie \ Instalacija \ Инсталация \ Instalēšana \ Instalacija \ Namestitev \ Montavimas \ Instalacija \ Installimine \ ইনস্টল করা \ इंस्टॉलेशन \ التثبيت \ نصب

Intel 1851/ 1700 CPU

1

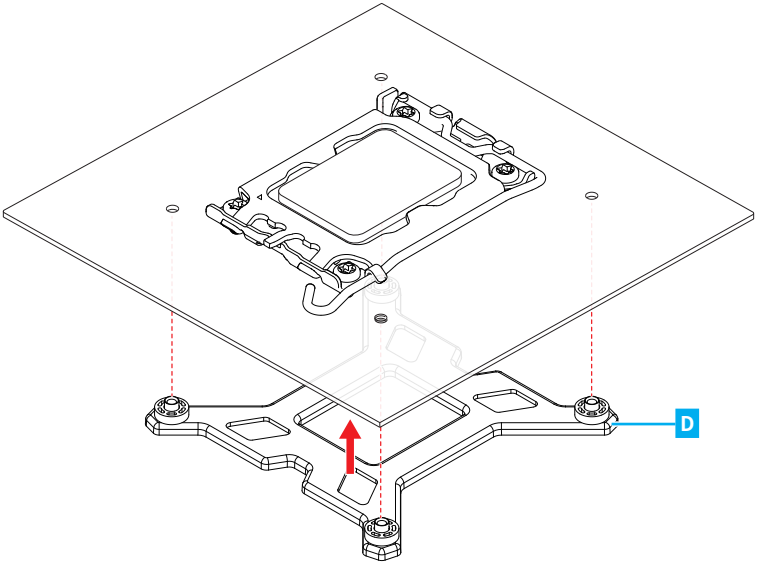

2

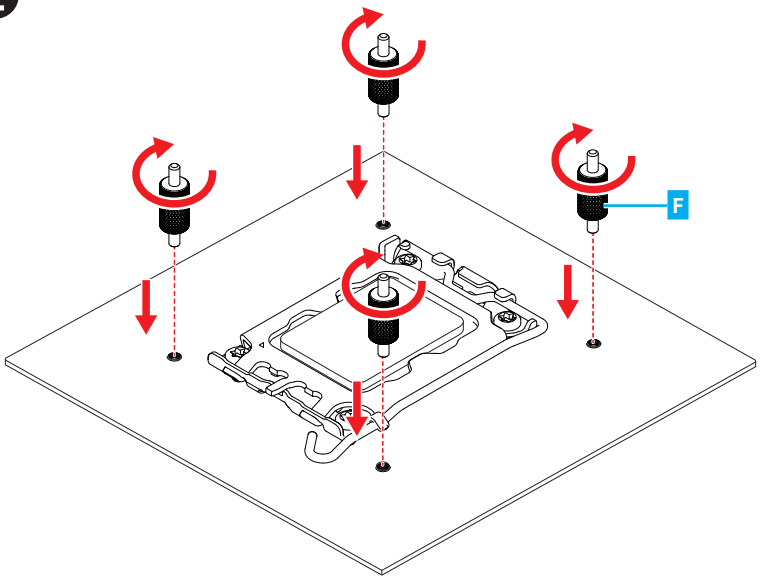

3

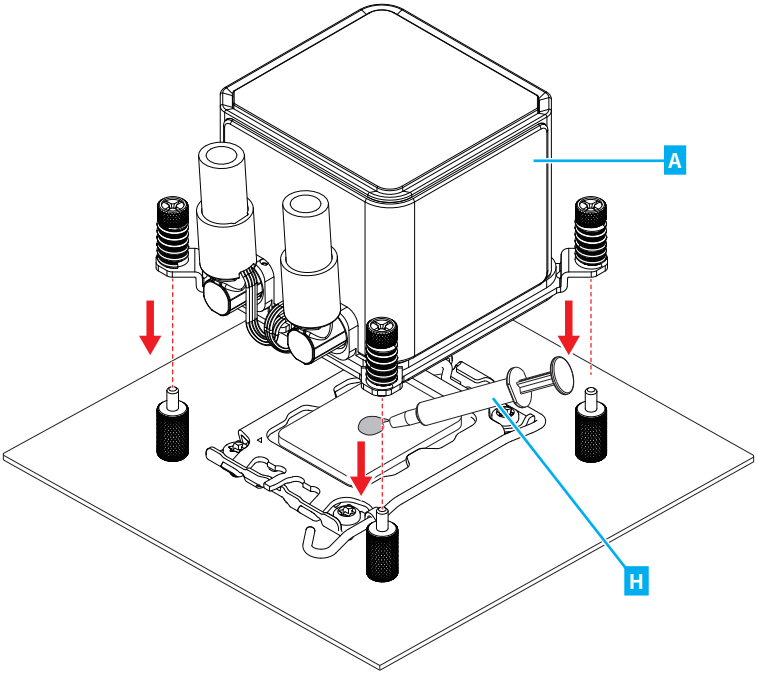

4

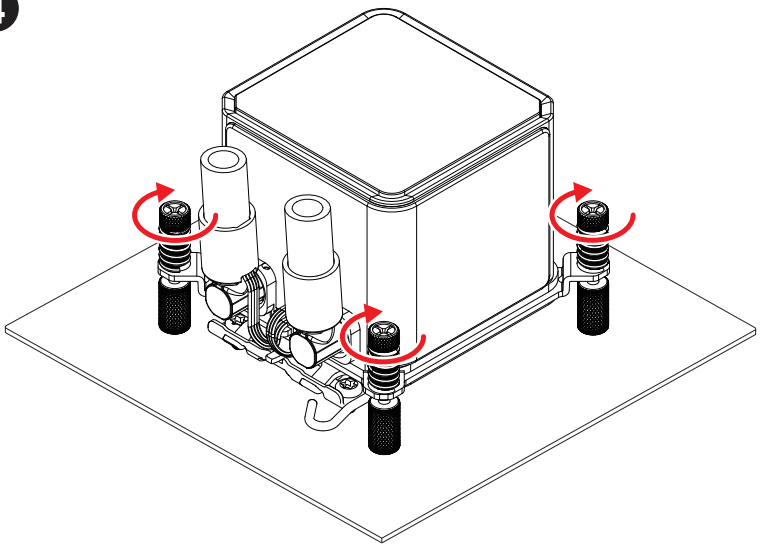

5

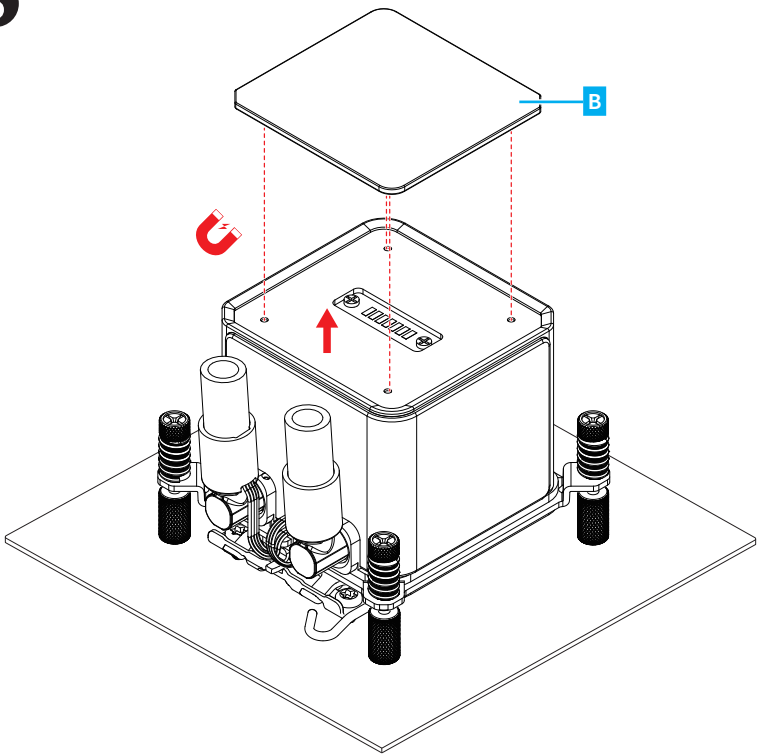

6

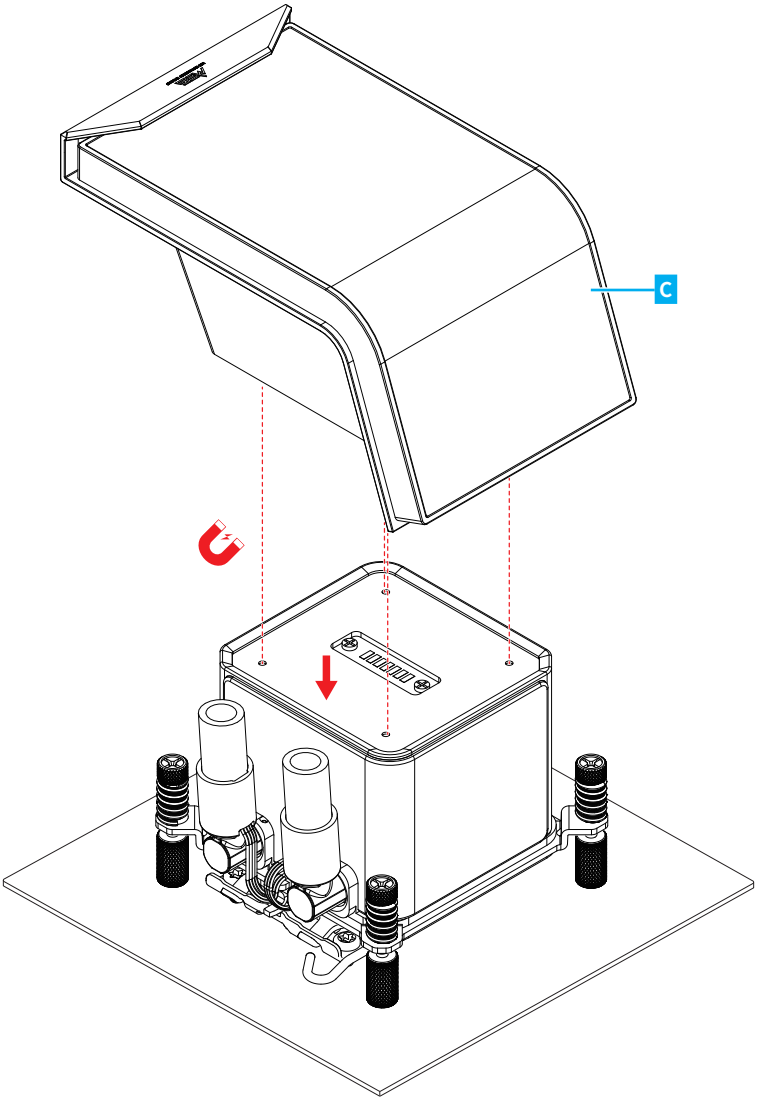

Important

- *The display supports fixed-orientation installation only. Please follow the assembly instructions.*
- *To ensure optimal curved visual quality and display stability, 180° screen rotation is currently not supported.*

AMD AM5 \ AM4 CPU

1

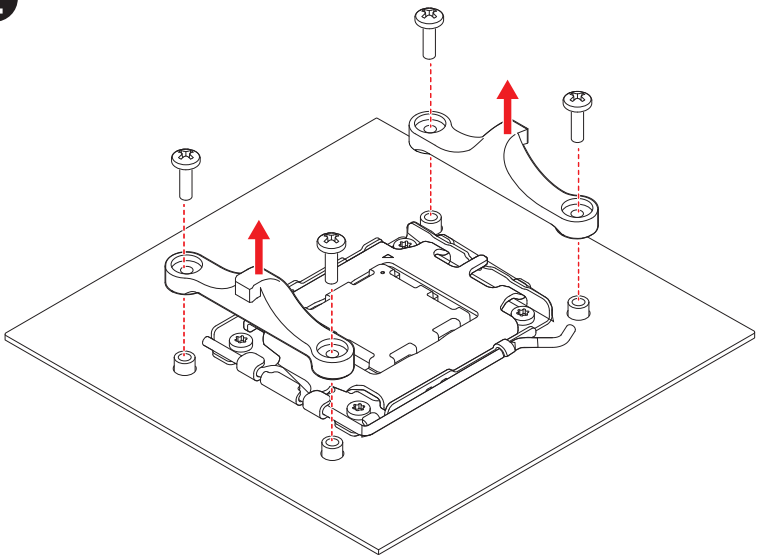

2

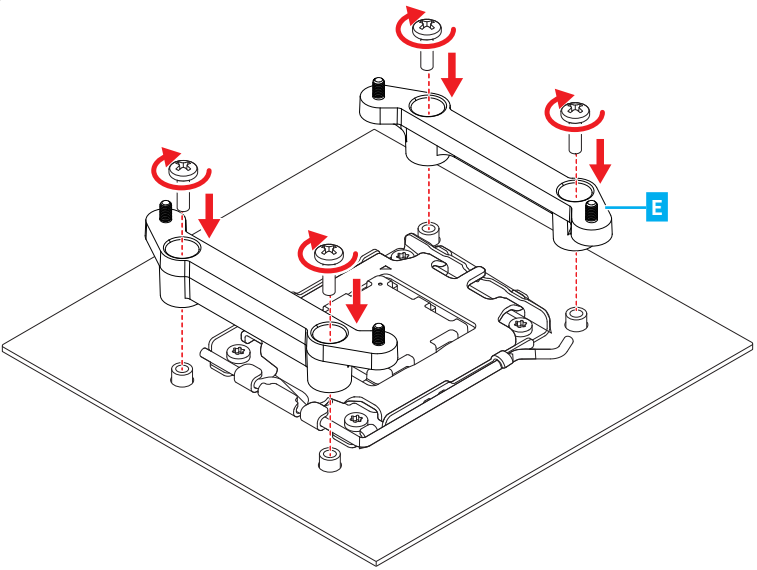

3

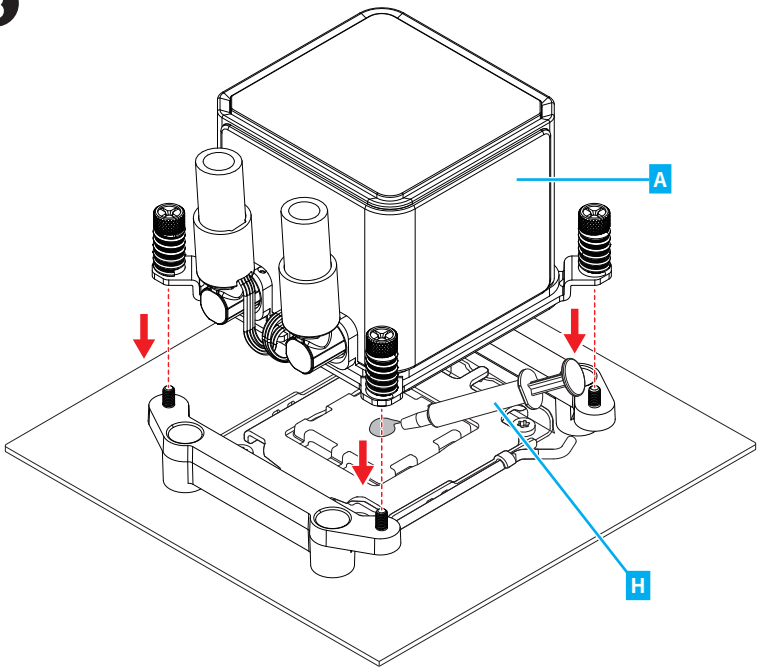

4

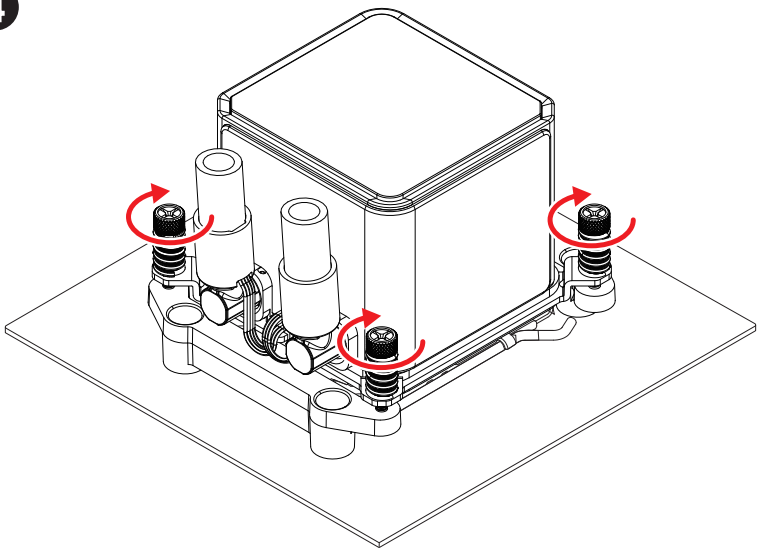

5

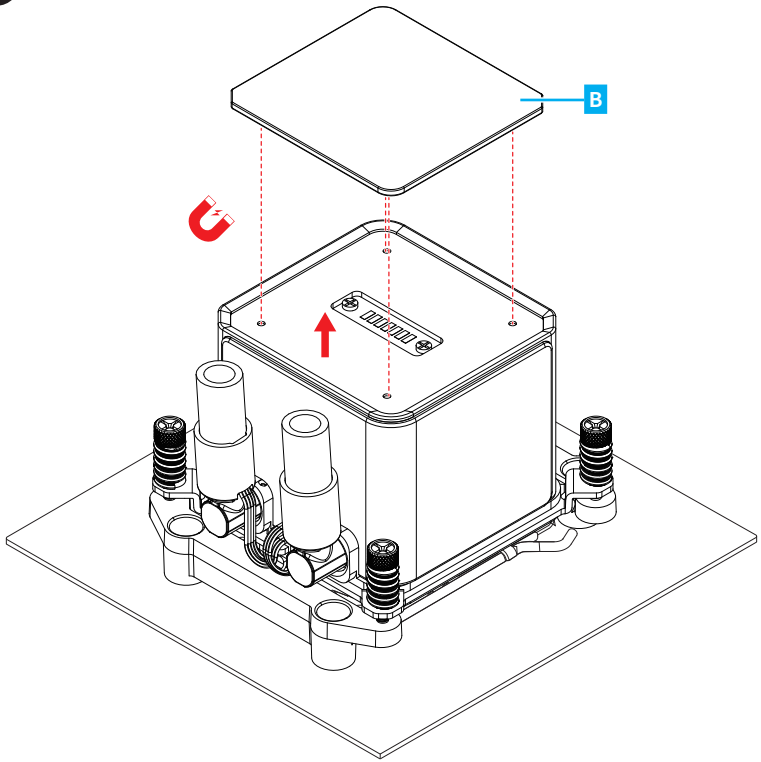

6

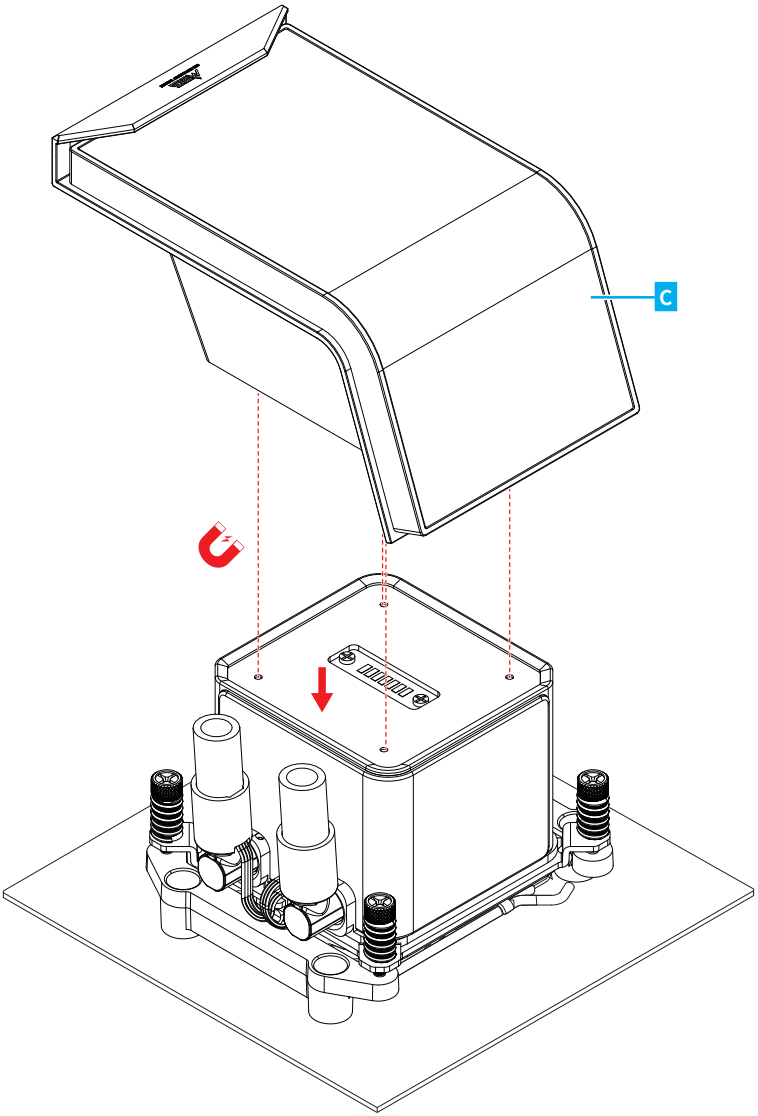

Important

- *The display supports fixed-orientation installation only. Please follow the assembly instructions.*
- *To ensure optimal curved visual quality and display stability, 180° screen rotation is currently not supported.*

Radiatior

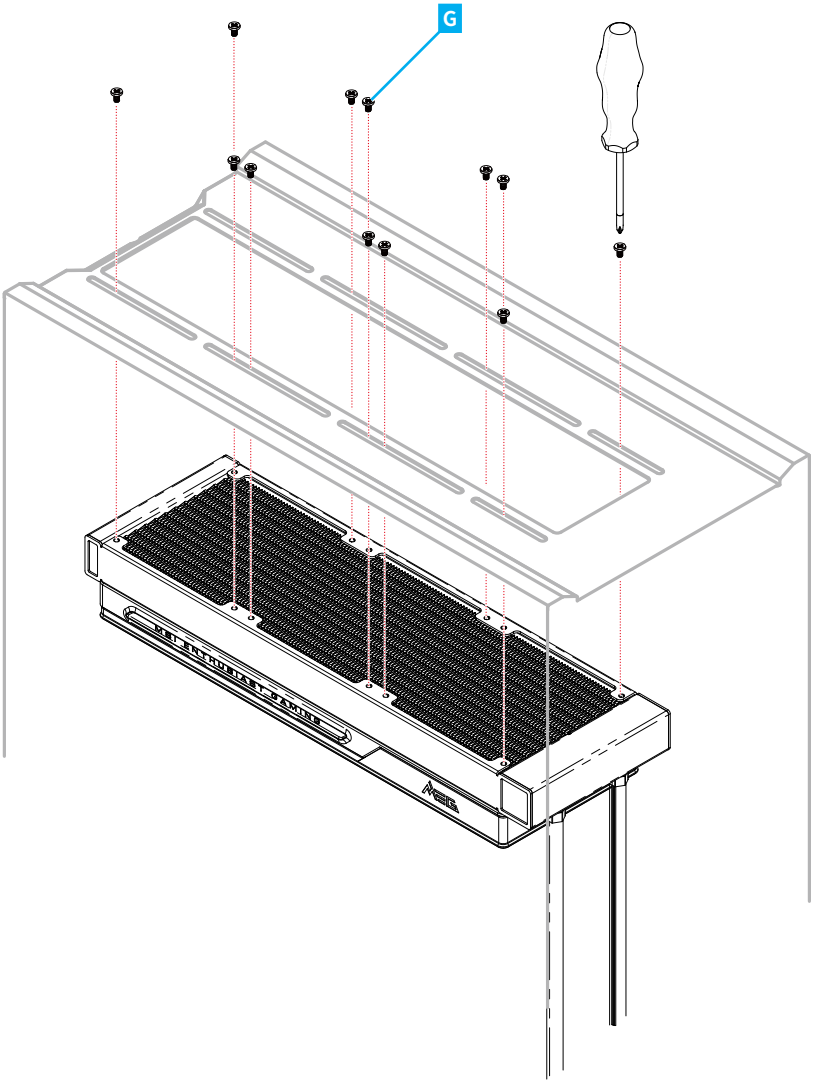

Connection

Verbindung \ Connexion \ Подключение \ Połączenie \ Ligação \ Conexão \ Conexión \ Bağlantı \ Forbindelse \ Verbinding \ Tilkobling \ Připojení \ Σύνδεση \ Anslutning \ Liitäntä \ Csatlakozás \ Connessione \ Қосылым \ 連接 \ 连接 \ コネクター \ 연결 \ Kết nối \ การเชื่อมต่อ \ Sambungan \ Підключення \ Conexiune \ Pripojenie \ Povezivanje \ Връзка \ Savienojums \ Veza \ Povezava \ Prijungimas \ Veza \ Ühendamine \ সংযোগ \ কনেক্শন \ اتصال \ اتصالاتصال

For motherboards without JAF_2 connector

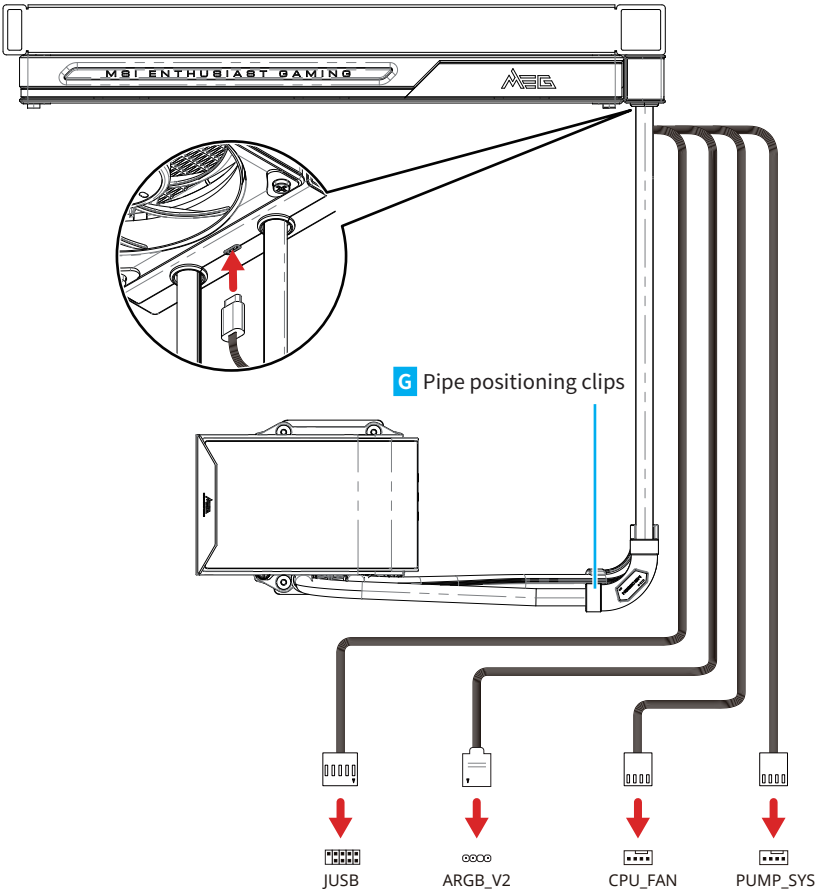

Important

*To prevent abnormal operation, connect to CPU_FAN only for **2A power** and ensure both CPU_FAN and PUMP_SYS headers stay in **PWM mode**.*

For motherboards with JAF_2 connector

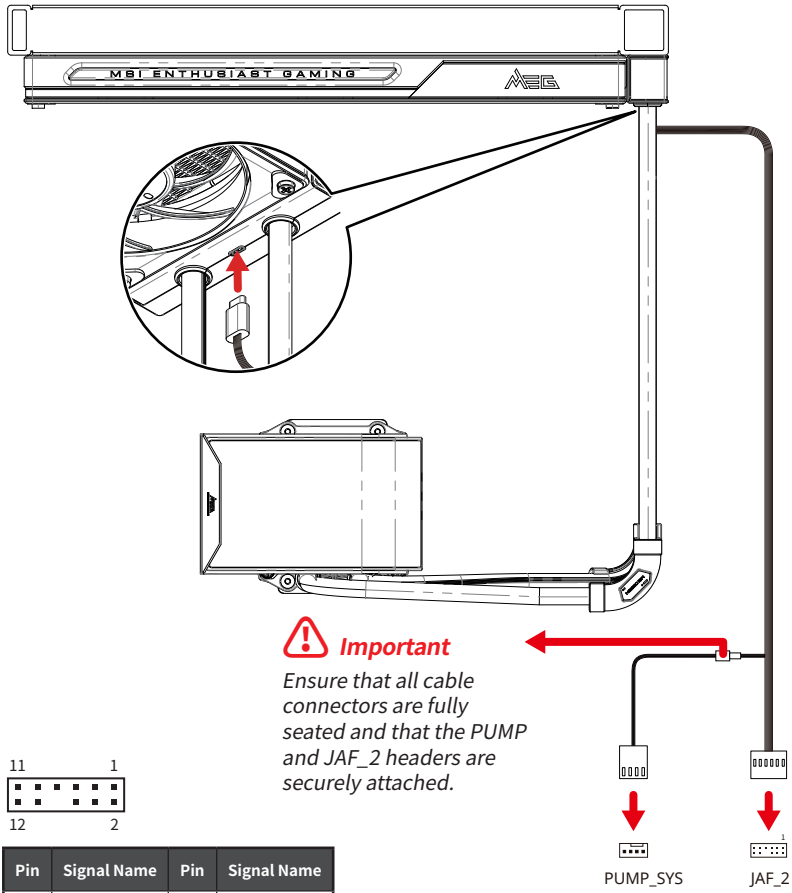

Important

Ensure that all cable connectors are fully seated and that the PUMP and JAF_2 headers are securely attached.

Pin	Signal Name	Pin	Signal Name
1	Ground	2	5V
3	12V	4	DATA
5	Sense	6	Ground
7	Speed	8	N/A
9	Ground	10	USB 2.0+
11	+5VSB	12	USB 2.0-

Note

- *It is recommended that users set the fan/pump speed duty > 20%.*
- *This product uses ARGB GEN2 LEDs and supports MSI EZ Conn connector motherboards, compatible with Mystic Light.*

For motherboards with JAF_1 connector

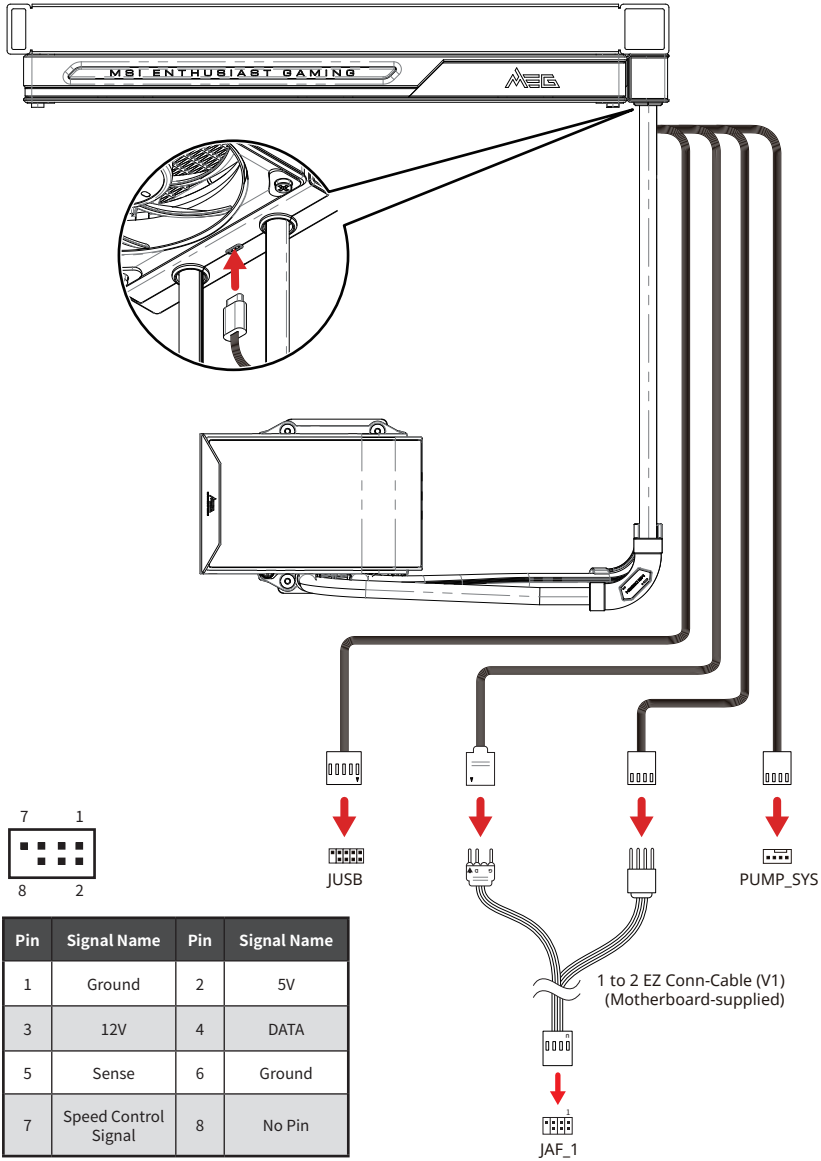

Pin	Signal Name	Pin	Signal Name
1	Ground	2	5V
3	12V	4	DATA
5	Sense	6	Ground
7	Speed Control Signal	8	No Pin

Note

- *It is recommended that users set the fan/pump speed duty > 20%.*
- *This product uses ARGB GEN2 LEDs and supports MSI EZ Conn connector motherboards, compatible with Mystic Light.*

Software user guide

Software-Benutzerhandbuch \ Guide d'utilisation du logiciel \ Руководство пользователя программного обеспечения \ Podręcznik użytkownika oprogramowania \ Manual do software para o utilizador \ Guia do usuário do software \ Guía del usuario de software \ Yazılım kullanım kılavuzu \ Brugsvejledning til software \ Softwarehandleiding \ Brukerveiledning for programvare \ Uživatelská příručka k softwaru \ Οδηγός χρήσης λογισμικού \ Bruksanvisning för programvara \ Käyttäjän ohjelmiston opas \ Szoftveres felhasználói útmutató \ Guida utente del software \ Бағдарламалық жасақтаманың пайдаланушы нұсқаулығы \ 軟體使用手冊 \ 软件用户指南 \ ソフトウェアユーザーガイド \ 소프트웨어 사용자 가이드 \ Hướng dẫn sử dụng phần mềm \ คู่มือผู้ใช้ซอฟต์แวร์ \ Panduan pengguna perangkat lunak \ Посібник користувача ПЗ \ Ghidul utilizatorului software \ Návod na používanie softvéru \ Korisnička uputstva za softver \ Софтуерно ръководство на потребителя \ Programmatūras lietotāja rokasgrāmata \ Korisnički vodič za softver \ Uporabniški priročnik za programsko opremo \ Programinės įrangos naudotojo vadovas \ Korisnički vodič za softver \ Tarkvara kasutusjuhised \ সফটওয়্যার ব্যবহারের নির্দেশিকা \ सॉफ़्टवेयर उपयोगकर्ता गाइड \ راهنمای کاربر نرم افزار \ دليل المستخدم للبرنامج

NOTICE

Please note that the lighting, cooling, and screen display must be configured separately using the designated software. You will need to download and install these utilities beforehand:

- *RGB Lighting: Download MSI Center and go to → Mystic Light.*
- *Fan Speed: Download MSI Center and go to → Cooling Wizard.*
- *Display Screen: Download and use the standalone "EZ Display" software from the official product webpage.*

MSI Center user guide

Download

Herunterladen \ Télécharger \ Скачать \ Pobierz \ Transferir \ Descarregamento \ Descargar \ İndir \ Download \ Downloaden \ Last ned \ Stáhnout \ Λήψη \ Ladda ned \ Lataa \ Letöltés \ Download \ Жүктеу \ 下載 \ 下载 \ ダウンロード \ 다운로드 \ Tải về \ ดาวน์โหลด \ Unduh \ Завантажити \ Descărcare \ Stiahnutie \ Preuzimanje \ Изтегляне \ Lejupielādēt \ Preuzmi \ Prenos \ Atsisiųsti \ Preuzimanje \ Alla laadimine \ ডাউনলোড করুন \ ডাউনলোড \

دانلود \ تنزیل

Download MSI Center at https://msi.gm/DC-manual or by scanning the QR code.

Download MSI Center user guide at http://download.msi.com/manual/mb/MSICENTER.pdf or by scanning the QR code.

EZ Display user guide

Please download EZ Display from the MSI official website's download page and install it.

Bitte laden Sie EZ Display von der Download-Seite der offiziellen MSI-Website herunter und installieren Sie es.

Veuillez télécharger EZ Display à partir de la page de téléchargement du site officiel de MSI et l'installer.

Пожалуйста, загрузите EZ Display со страницы загрузки официального сайта MSI и установите его.

Pobierz program EZ Display ze strony pobierania oficjalnej witryny MSI i zainstaluj go.

Transfira o EZ Display a partir da página de transferência do website oficial da MSI e instale-o.

Baixe o EZ Display na página de download do site oficial da MSI e instale-o.

Descargue EZ Display desde la página de descarga del sitio web oficial de MSI e instálelo.

Lütfen EZ Display'i MSI resmi web sitesinin indirme sayfasından indirin ve kurun.

Download EZ Display fra download-siden på MSI's officielle hjemmeside, og installer det.

Download EZ Display van de downloadpagina op de officiële MSI-website en installeer het.

Last ned EZ Display fra nedlastingssiden på MSIs offisielle nettsted og installer det.

Stáhněte si EZ Display ze stránky stahování na oficiálních webových stránkách MSI a nainstalujte jej.

Πραγματοποιήστε λήψη του EZ Display από τη σελίδα λήψης της επίσημης ιστοσείδας της MSI και εγκαταστήστε το.

Ladda ner EZ Display från nedladdningssidan på MSI:s officiella webbplats och installera det.

Lataa EZ Display MSI:n virallisen verkkosivuston lataussivulta ja asenna se.

Töltse le az EZ Display alkalmazást az MSI hivatalos webhelyének letöltési oldaláról, és telepítse.

Scaricare EZ Display dalla pagina di download del sito ufficiale MSI e installarlo.

EZ Display бағдарламасын MSI ресми сайтының жүктеу бетінен жүктеп алып, орнатыңыз.

請從微星官網的下載頁面，下載 EZ Display 並且安裝。

请从微星官网的下载页面，下载 EZ Display 并且安装。

MSI公式サイトのダウンロードページから EZ Display をダウンロードしてインストールしてください。

MSI 공식 웹사이트의 다운로드 페이지에서 EZ Display를 다운로드하여 설치하십시오.

Vui lòng tải xuống EZ Display từ trang tải xuống của trang web chính thức của MSI và cài đặt.

โปรดดาวน์โหลด EZ Display จากหน้าดาวน์โหลดของเว็บไซต์ทางการของ MSI และทำการติดตั้ง

Silakan unduh EZ Display dari halaman unduhan situs web resmi MSI dan instal.

Будь ласка, завантажте EZ Display зі сторінки завантаження офіційного веб-сайту MSI та встановіть його.

Vă rugăm să descărcați EZ Display de pe pagina de descărcare a site-ului oficial MSI și să îl instalați.

Stiahnite si EZ Display zo stránky na stiahnutie na oficiálnej webovej stránke MSI a nainštalujte ho.

Preuzmite EZ Display sa stranice za preuzimanje na službenoj MSI web stranici i instalirajte ga.

Моля, изтеглете EZ Display от страницата за изтегляне на официалния уебсайт на MSI и го инсталирайте.

Lūdzu, lejupielādējiet EZ Display no MSI oficiālās tīmekļa vietnes lejupielādes lapas un instalējiet to.

Preuzmite EZ Display sa stranice za preuzimanje na zvaničnom MSI veb-sajtu i instalirajte ga.

Prenesite EZ Display s strani za prenose na uradni spletni strani MSI in ga namestite.

Atsisiųskite „EZ Display“ iš oficialios MSI svetainės atsisiuntimo puslapio ir įdiekite.

Preuzmite EZ Display sa stranice za preuzimanje na službenoj MSI web stranici i instalirajte ga.

Palun laadige EZ Display alla MSI ametliku veebisaidi allalaadimislehelt ja installige see.

অনুগ্রহ করে MSI অফিসিয়াল ওয়েবসাইটের ডাউনলোড পেজ থেকে EZ Display ডাউনলোড করুন এবং ইনস্টল করুন।

कृपया MSI की आधिकारिक वेबसाइट के डाउनलोड पेज से EZ Display डाउनलोड करें और इसे इंस्टॉल करें।

يرجى تنزيل EZ Display من صفحة التنزيل على موقع MSI الرسمي وتثبيته.

لطفاً EZ Display را از صفحه دانلود در وب‌سایت رسمی MSI دانلود و نصب کنید.

EZ Display Configuration

The main interface displays system information and the monitor connection status.

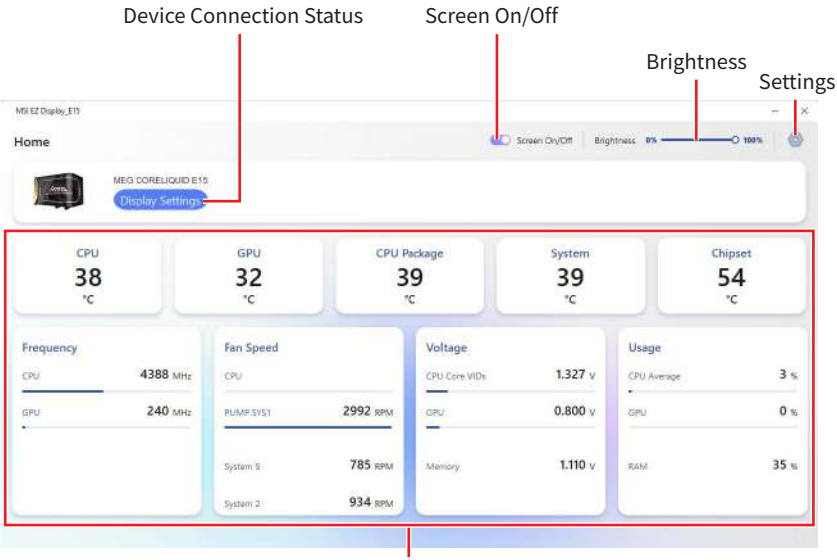

Brightness - Adjust screen intensity from 0%—100%.

Screen On/Off - Main power switch for the screen.

Settings - Set display language, temperature unit (°C/°F), enable launch on startup, toggle standby mode. App and firmware versions are also displayed for reference.

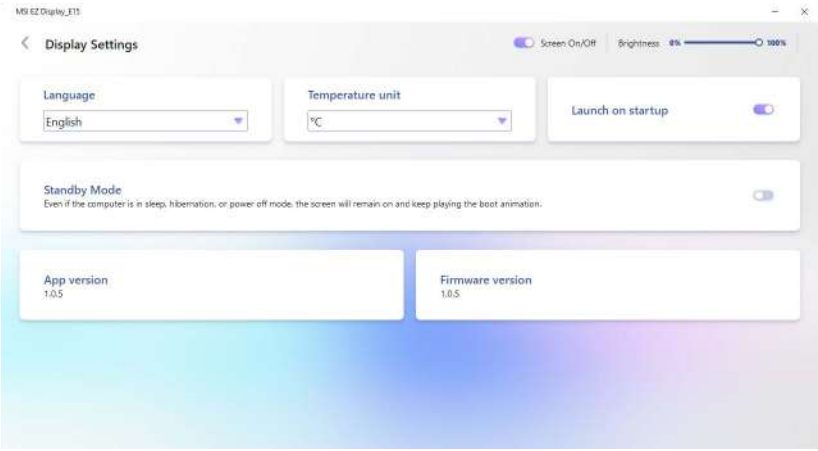

Display Settings

Click the Device Connection Status area to enter the control interface.

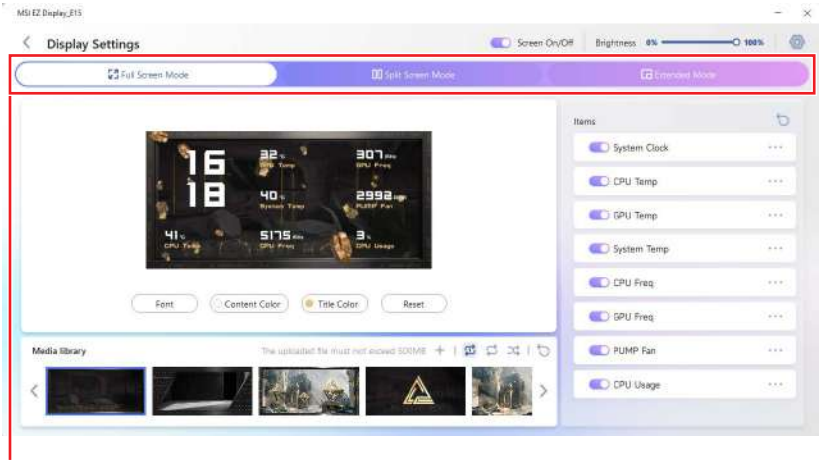

Select from three display modes: Full Screen Mode, Split Screen Mode, or Extended Mode.

1. **Full Screen Mode** - Displays system information in a single full-screen layout.

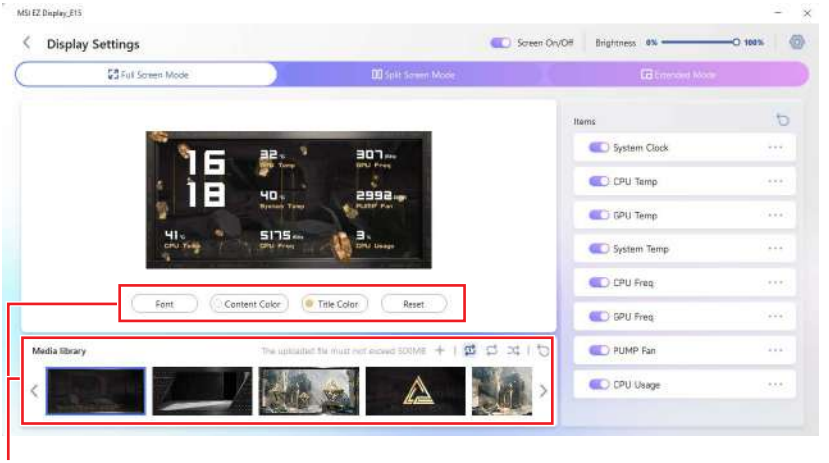

Font: Change the text style.

Content Color / Title Color: Adjust the colors of the displayed information.

Reset: Revert all appearance settings to default.

Media Library: Customize the background by selecting official animations or uploading personal video files.

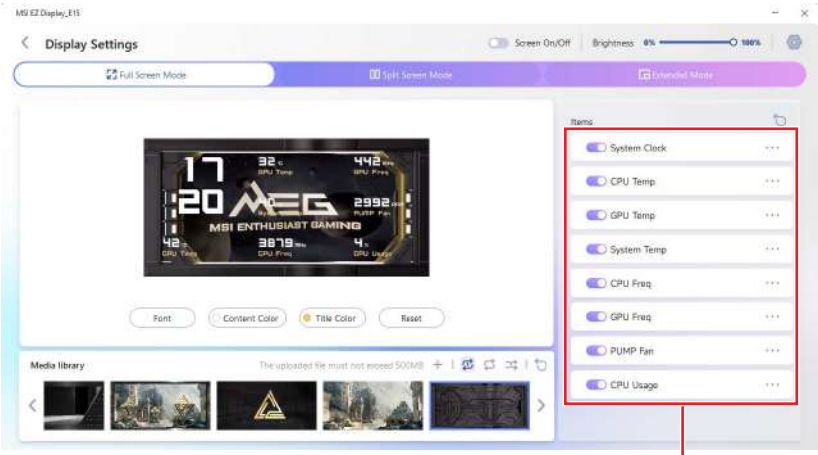

Monitoring Items: Toggle the switches to select which system data to display on the screen.

Advanced Settings: Click the ellipsis icon "..." next to each item to configure detailed parameters or switch the display to Clock mode.

2. **Split Screen Mode** - Splits the screen into two sections to display different background videos simultaneously.

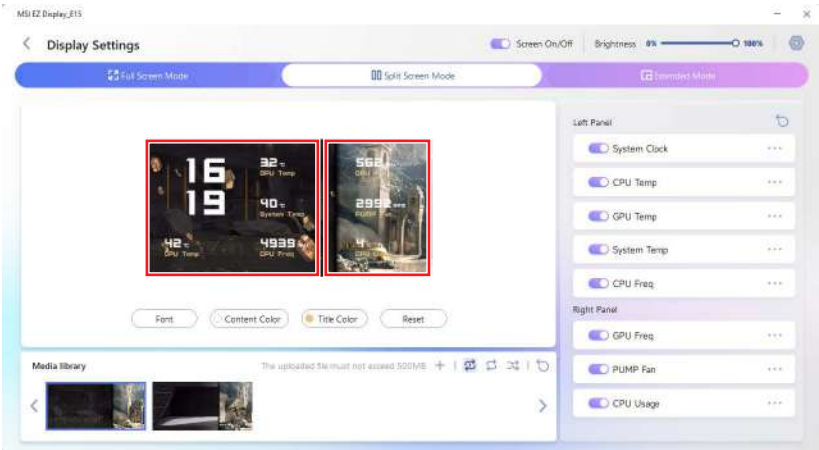

Important

- *Media Library supports JPG, JPEG, PNG, MP4, and AVI formats. The maximum upload size is 500 MB per file.*

3. **Extended Mode** - When using the Extended Display feature, the screen can function as a secondary display.

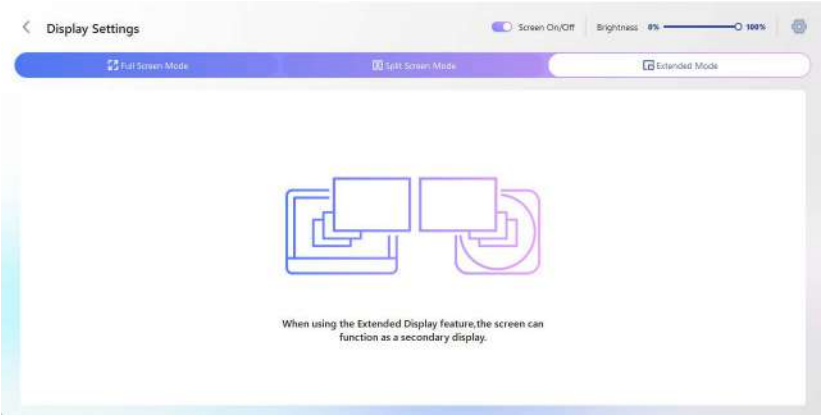

Regulatory Notices

FCC-B Radio Frequency Interference Statement

This equipment has been tested and found to comply with the limits for a Class B digital device, pursuant to part 15 of the FCC rules. These limits are designed to provide reasonable protection against harmful interference in a residential installation. This equipment generates, uses and radiates radio frequency energy, and, if not installed and used in accordance with the instructions, may cause harmful interference to radio communications. However, there is no guarantee that interference will not occur in a particular installation. If this equipment does cause harmful interference to radio or television reception, which can be determined by turning the equipment off and on, the user is encouraged to try to correct the interference by one or more of the following measures:

- Reorient or relocate the receiving antenna.
- Increase the separation between the equipment and receiver.
- Connect the equipment into an outlet on a circuit different from that to which the receiver is connected.

NOTE

- The changes or modifications not expressly approved by the party responsible for compliance could void the user' s authority to operate the equipment.
- Shield interface cables and AC power cord, if any, must be used in order to comply with the emission limits.

FCC Conditions

This device complies with part 15 of the FCC Rules. Operation is subject to the following two conditions:

- This device may not cause harmful interference.
- This device must accept any interference received, including interference that may cause undesired operation.

MSI Computer Corp.

901 Canada Court, City of Industry, CA 91748, USA

(626)913-0828

www.msi.com

CE Conformity

Products bearing the CE marking comply with one or more of the following EU Directives as may be applicable:

- RED 2014/53/EU
- Low Voltage Directive 2014/35/EU
- EMC Directive 2014/30/EU
- RoHS Directive 2011/65/EU
- Implementing measure Directive 2009/125/EC of ESPR Regulation (EU) 2024/1781

Compliance with these directives is assessed using applicable European Harmonized Standards.

For any support regarding the EU General Product Safety Regulation (GPSR), please contact MSI Computer Europe B.V. via https://msi.gm/gpsr Churchilllaan 202, 5705 BK Helmond, the Netherlands.

KC인증서

R-R-MSI-MS-7ZWK

상호: (주)엠에스아이코리아
제품명: Water Cooler
모델명: MS-7ZWK
제조년월: 2026년
제조자 및 제조국가: MSI\중국

Chemical Substances Information

In compliance with chemical substances regulations, such as the EU REACH Regulation (Regulation EC No. 1907/2006 of the European Parliament and the Council), MSI provides the information of chemical substances in products at:

https://csr.msi.com/global/index

Environmental Policy

- The product has been designed to enable proper reuse of parts and recycling and should not be thrown away at its end of life.
- Users should contact the local authorized point of collection for recycling and disposing of their end-of-life products.
- Visit the MSI website <https://csr.msi.com/global/pevn_ewaste> and locate a nearby distributor for further recycling information.
- Please visit <https://us.msi.com/page/recycling> for information regarding the recycling of your product in the US.

WEEE (Waste Electrical and Electronic Equipment) Statement

European Union: This symbol on the product indicates that this product cannot be discarded as municipal waste. Instead, it is your responsibility to dispose of your waste electrical and electronic equipment by handing it over to a designated collection point for recycling. For more information about where you can drop off your waste equipment for recycling, please contact your local city office, your household waste disposal service or the shop where you purchased the product.

日本JIS C 0950材質宣言

日本工業規格JIS C 0950により、2006年7月1日以降に販売される特定分野の電気および電子機器について、製造者による含有物質の表示が義務付けられます。

https://csr.msi.com/tw/Japan-JIS-C-0950-Material-Declarations

India RoHS

This product complies with the "India E-waste (Management and Handling) Rule 2011" and prohibits use of lead, mercury, hexavalent chromium, polybrominated biphenyls or polybrominated diphenyl ethers in concentrations exceeding 0.1 weight % and 0.01 weight % for cadmium, except for the exemptions set in Schedule 2 of the Rule.

Türkiye EEE yönetmeliği

Türkiye Cumhuriyeti: EEE Yönetmeliğine Uygundur

Україна обмеження на наявність небезпечних речовин

Обладнання відповідає вимогам Технічного регламенту щодо обмеження використання деяких небезпечних речовин в електричному та електронному обладнані, затвердженого постановою Кабінету Міністрів України від 10 березня 2017 р. № 139

Việt Nam RoHS

Kể từ ngày 01/12/2012, tất cả các sản phẩm do công ty MSI sản xuất tuân thủ Thông tư số 30/2011/TT-BCT quy định tạm thời về giới hạn hàm lượng cho phép của một số hóa chất độc hại có trong các sản phẩm điện, điện tử"

Bangladesh RoHS Statement

This product shipping to Bangladesh comply with RoHS requirements as prescribed in the Hazardous Waste (E-waste) Management Rules, 2021 by Government of Bangladesh.

For more information, please refer:
https://csr.msi.com/global/bangladesh-rohs-statement

Bangladesh E-waste Management Reminder

Please manage, dismantle, dispose of, or recycle e-waste properly as per the Environmental Protection Rules, 1997 to avoid the harm that may be caused to the environment and ecosystem, public interest and public health.

Material Declaration under India’ s Plastic Waste Management Rules:

INDOMSI COMPUTERS PRIVATE LIMITED

Regn. No.: IM-06-000-06-AAHCI0478A-25

Thickness ≥ 50 microns

产品中有害物质的名称及含量

部件名称	有害物质									
	Pb	Hg	Cd	Cr(VI)	PBBs	PBDEs	DBP	DIBP	BBP	DEHP
电路板组件*	╳	○	○	○	○	○	○	○	○	○
电缆/连接器	╳	○	○	○	○	○	○	○	○	○
金屬機構件	╳	○	○	○	○	○	○	○	○	○

注1：○：表示该有害物质在该部件所有均质材料中的含量均不超出电器电子产品有害物质限制使用国家标准要求。

╳：表示该有害物质至少在该部件的某一均质材料中的含量超出电器电子产品有害物质限制使用国家标准要求。

注2：以上未列出的部件，表明其有害物質含量均不超出电器电子产品有害物质限制使用国家标准要求。

注3：上述表格标注“╳”之部件，皆符合达标管理目录限用物质应用例外清单之限值要求。

* 电路板组件：包括印刷电路板及其构成的零部件。

限用物質含有情況標示聲明書

單元	限用物質及其化學符號					
	鉛 (Pb)	汞 (Hg)	鎘 (Cd)	六價鉻 (Cr^{+6})	多溴聯苯 (PBB)	多溴二苯醚 (PBDE)
印刷電路板組件	—	○	○	○	○	○
外部信號連接頭	—	○	○	○	○	○
線材	—	○	○	○	○	○
塑料機構件	○	○	○	○	○	○
金屬機構件	○	○	○	○	○	○
橡膠件	○	○	○	○	○	○

備考1. “超出0.1 wt %” 及 “超出0.01 wt %” 係指限用物質之百分比含量超出百分比含量基準值。

備考2. “○” 係指該項限用物質之百分比含量未超出百分比含量基準值。

備考3. “—” 係指該項限用物質為排除項目。

Warning

Please read the following information carefully.

- Built-in component, suitable enclosure and type of supply connection should be provided by end system.
- When installing the component, EN IEC 62368-1:2020+A11:2020 must be fulfilled.
- This built-in component shall be connected to a DC source, which is insulated from the AC mains supply by double or reinforced insulation.
- The Liquid Cooling is not intended to be repaired by service personal in case of failure or component defect.
- The Liquid Cooling shall not be exposed to dripping or splashing and no objects filled with liquid shall be placed on the apparatus.
- The Liquid Cooling must not be disposed together with the domestic waste. This product has to be disposed at an authorized place for recycling of electrical and electronic appliances. By collecting and recycling waste. You can help save natural resources and make sure the product is disposed in an environmental friendly and healthy way.

Specifications

- The product is a built-in component, when installed in final system, suitable enclosure and type of supply connection should be provided and all requirement of IEC 62368-1 should be fulfilled.
- Maximum working pressure at the normal operating condition: 0.0625_MP.
- Maximum working pressure at the abnormal operating condition and single fault condition :0.0625_MP
- Maximum operating ambient temperature: 40°C
- Maximum temperature during normal operating condition: 63.8°C
- Maximum temperature during abnormal operating condition and single fault condition:69.7°C

Green Product Features

- Reduced energy consumption during use and stand-by
- Limited use of substances harmful to the environment and health
- Easily dismantled and recycled
- Reduced use of natural resources by encouraging recycling
- Extended product lifetime through easy upgrades
- Reduced solid waste production through take-back policy

Copyright and Trademarks Notice

Copyright © Micro-Star Int' l Co., Ltd. All rights reserved. The MSI logo used is a registered trademark of Micro-Star Int' l Co., Ltd. All other marks and names mentioned may be trademarks of their respective owners. No warranty as to accuracy or completeness is expressed or implied. MSI reserves the right to make changes to this document without prior notice.

Technical Support

If a problem arises with your system and no solution can be obtained from the user guide, please contact your place of purchase or local distributor. Alternatively, please try the following help resources for further guidance.

- Visit the MSI website for technical guide, BIOS updates, driver updates, and other information: https://www.msi.com/support/
- Register your product at: http://register.msi.com

Revision History

- Version 1.0, 2026/04, first release.
- Version 1.1, 2026/04, Update connector information.
- Version 1.2, 2026/05, Update software information.
- Version 1.3, 2026/06, Update software information.