CORSAIR

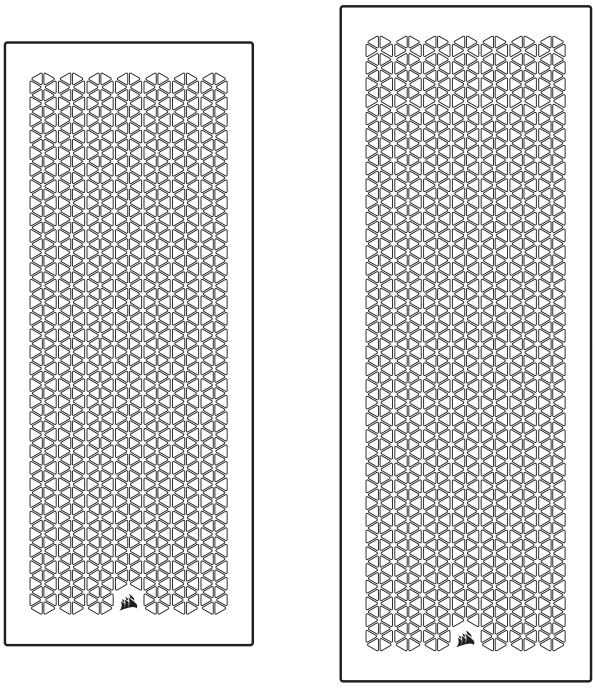

4000 SERIES & 5000D/X SERIES WOODEN PANELS

WOODEN FRONT & TOP PANELS

EN	ENGLISH	NO	NORSK	SC	简体中文
FR	FRANÇAIS	IT	ITALIANO	TC	繁體中文
DE	DEUTSCH	ES	ESPAÑOL	JA	日本語
DA	DANSK	PT	PORTUGUÊS	KO	한국어
FI	SUOMI	PL	POLSKI		
SV	SVENSKA	RU	РУССКИЙ		

UPGRADING YOUR PANELS

4000D AIRFLOW (WOOD TYPE) FRONT & TOP PANELS

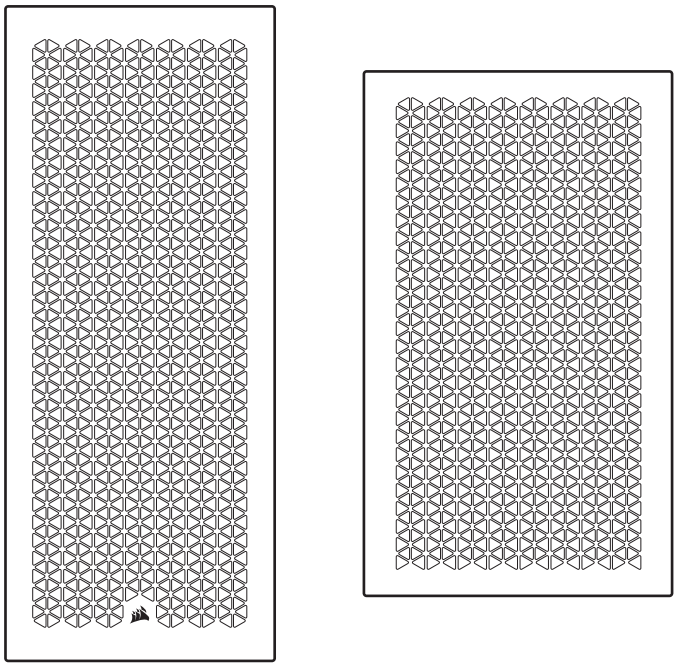

5000D AIRFLOW (WOOD TYPE) FRONT & TOP PANELS

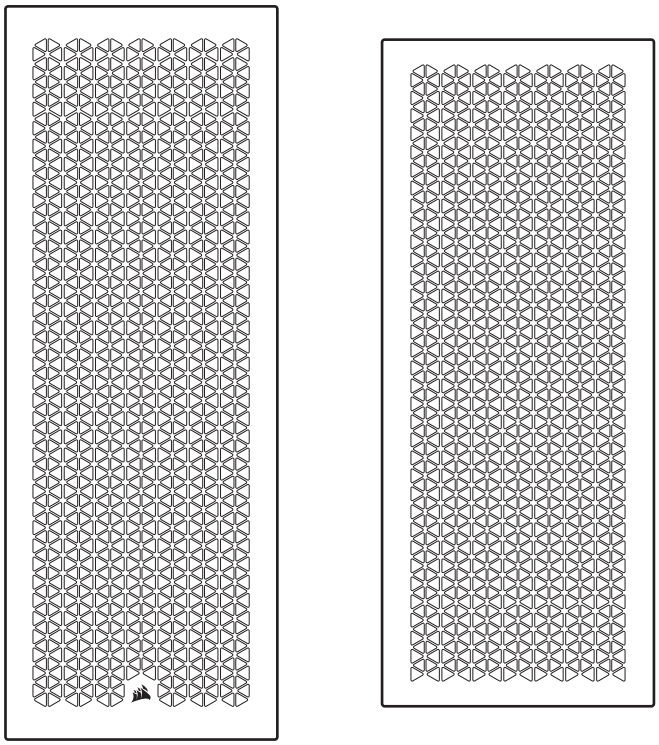

REMOVING THE FRONT & TOP PANELS

4000D PANELS

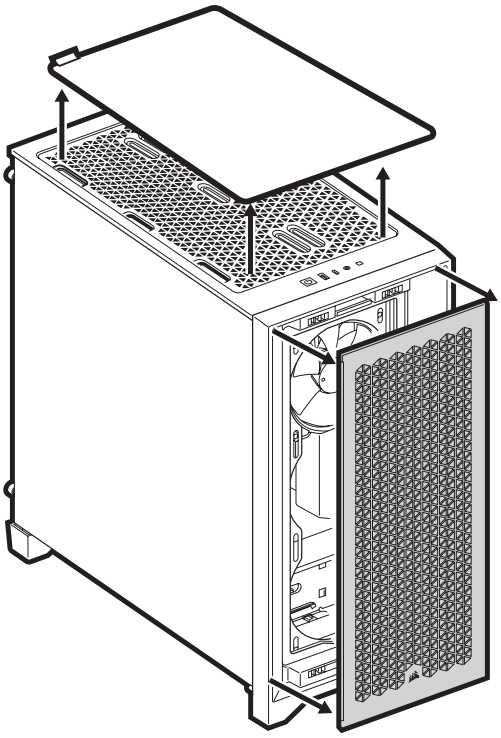

5000D PANELS

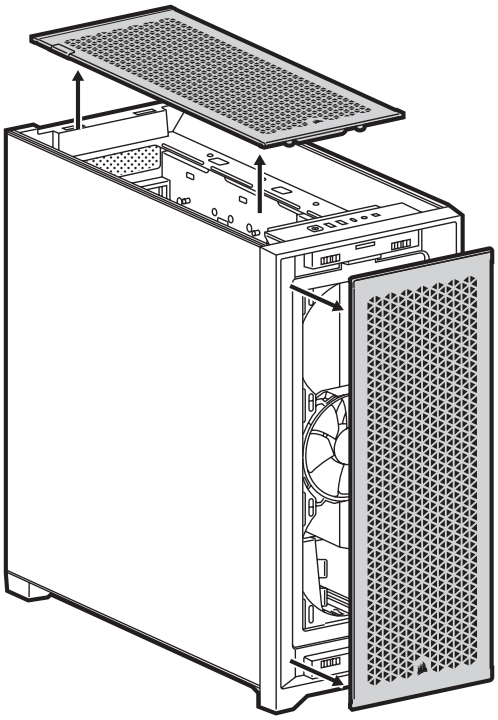

MISE À NIVEAU DE VOS PANNEAUX

PANNEAUX AVANT ET SUPÉRIEUR 4000D AIRFLOW (BOIS)

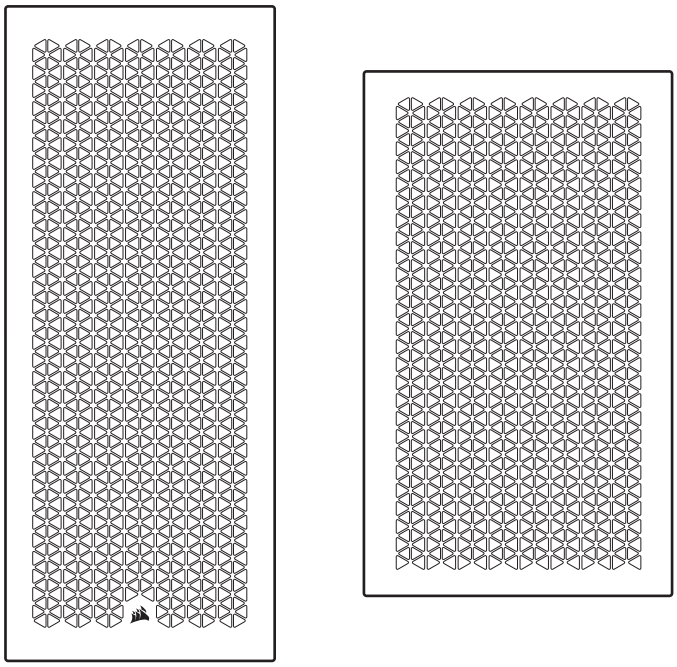

PANNEAUX AVANT ET SUPÉRIEUR 5000D AIRFLOW (BOIS)

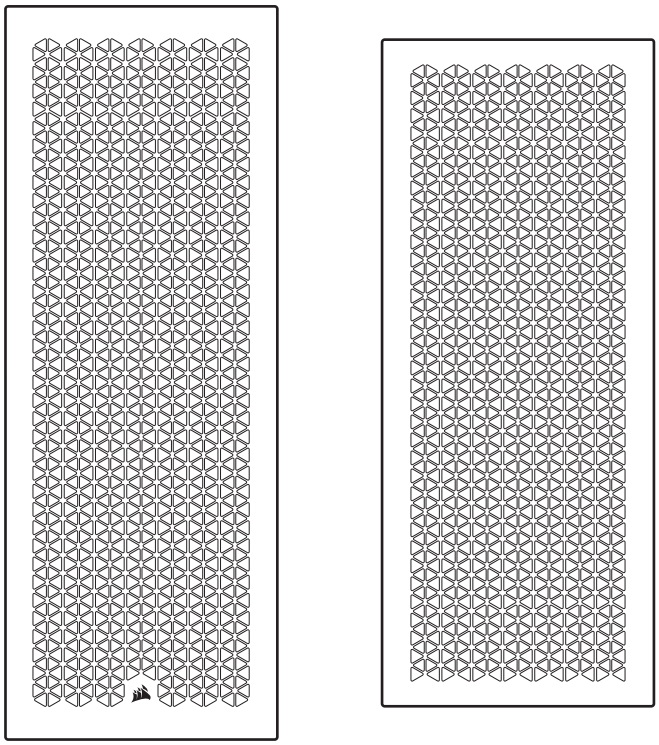

RETRAIT DES PANNEAUX AVANT ET SUPÉRIEUR

PANNEAUX 4000D

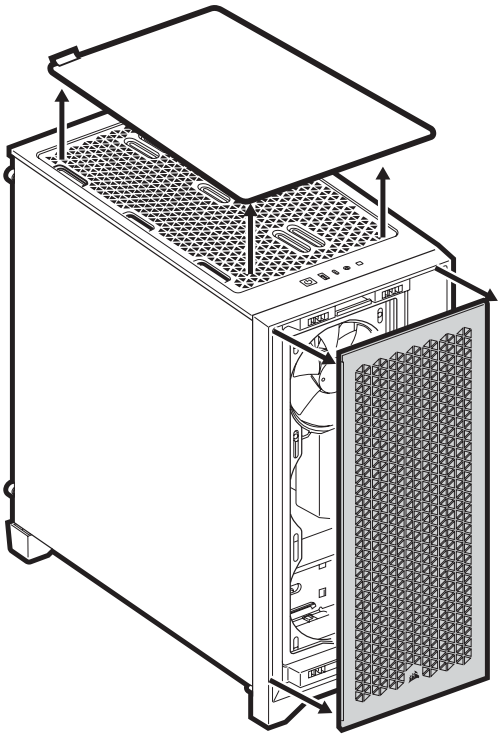

PANNEAUX 5000D

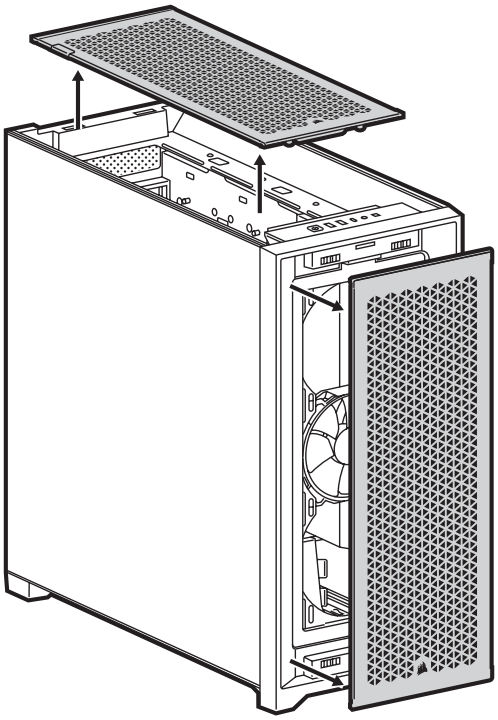

UPGRADE FÜR IHRE ABDECKUNGEN

4000D AIRFLOW (HOLZDESIGN) FRONT- UND OBERABDECKUNGEN

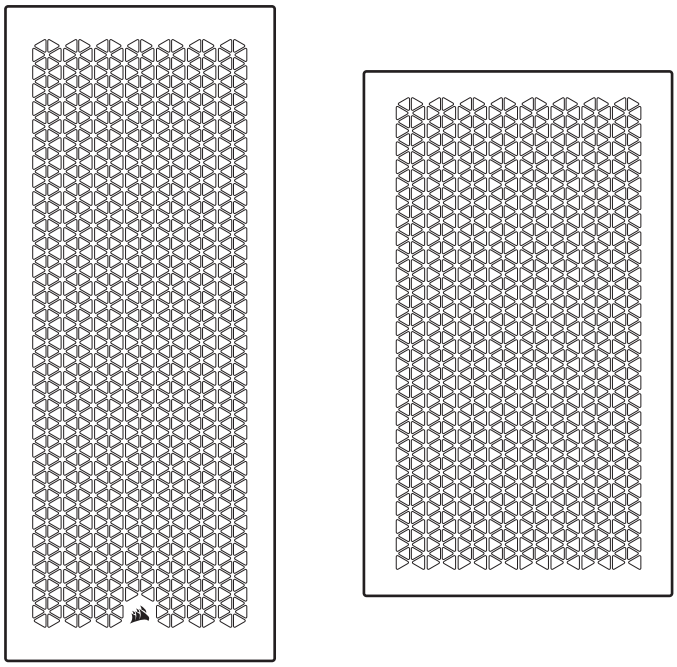

5000D AIRFLOW (HOLZDESIGN) FRONT- UND OBERABDECKUNGEN

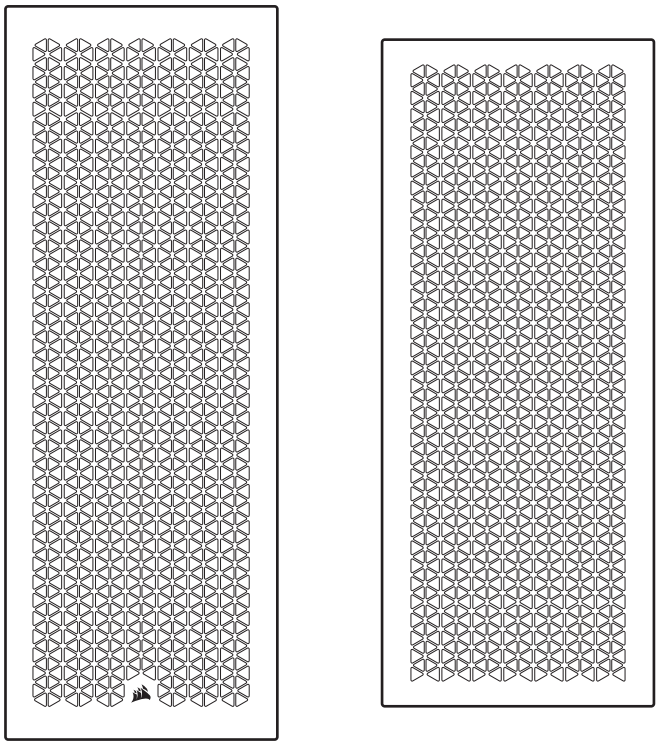

ENTFERNEN DER FRONT- UND OBERABDECKUNG

ABDECKUNGEN FÜR 4000D

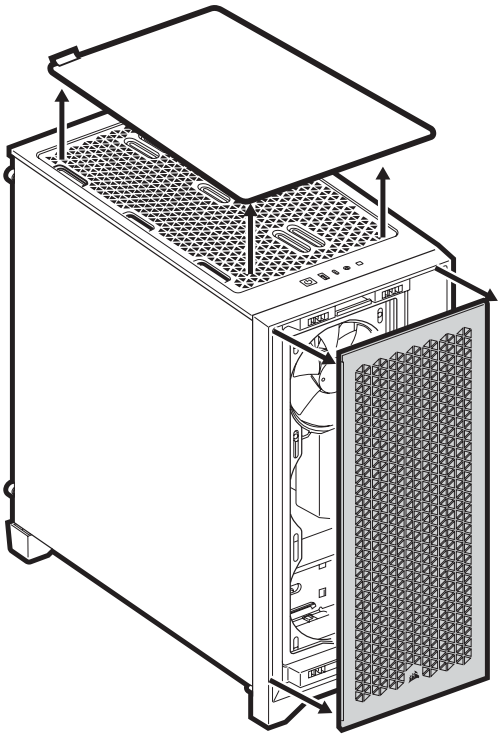

ABDECKUNGEN FÜR 5000D

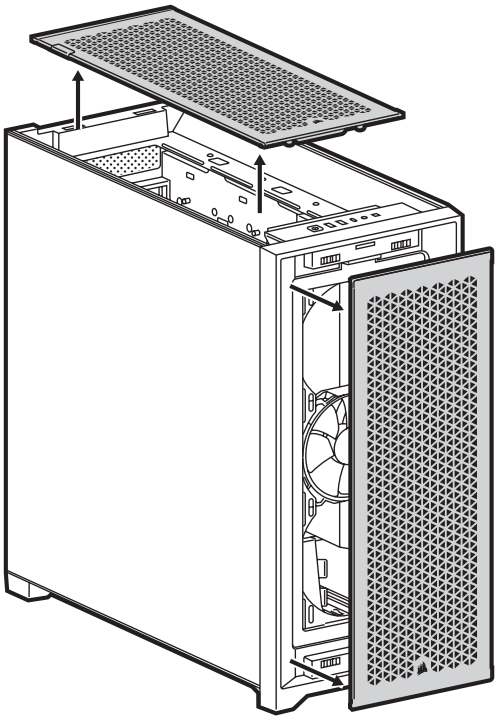

OPGRADERING AF DINE PANELER

4000D AIRFLOW (TRÆTYPE) FRONT- OG TOPPANELER

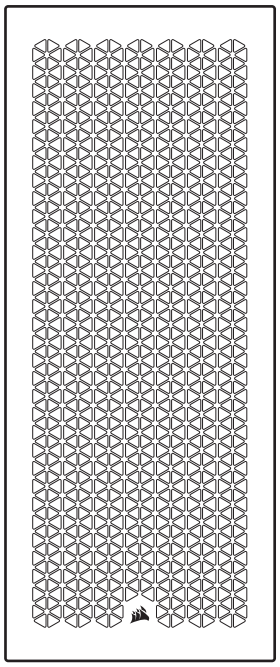

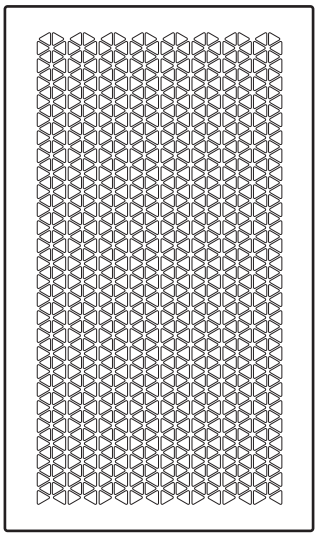

5000D AIRFLOW (TRÆTYPE) FRONT- OG TOPPANELER

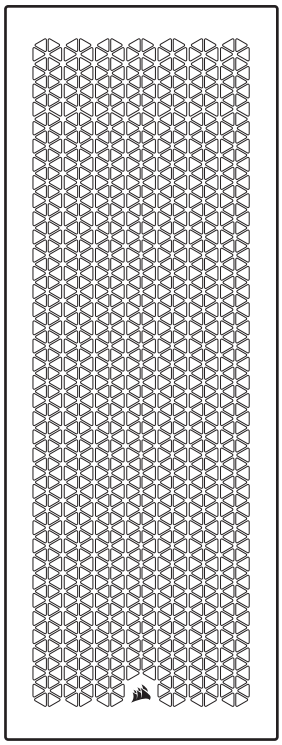

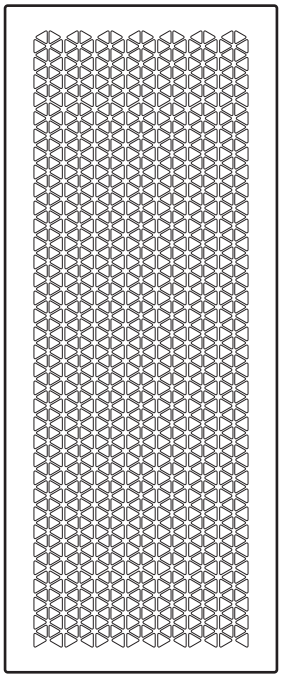

AFMONTERING AF FRONT- OG TOPPANELERNE

4000D-PANELER

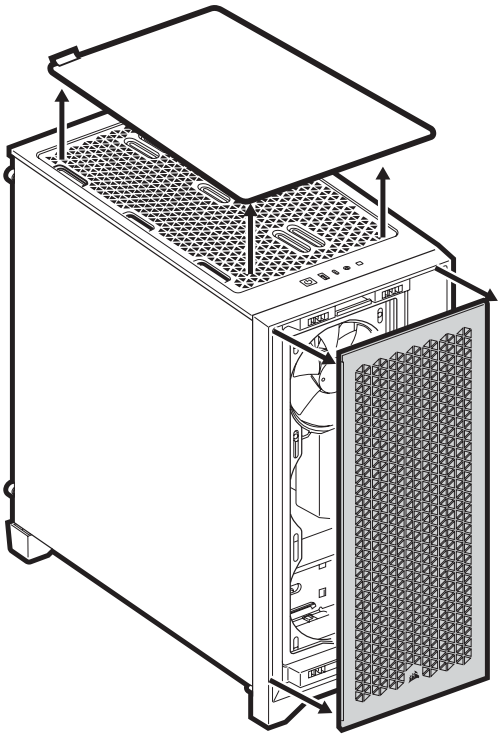

5000D-PANELER

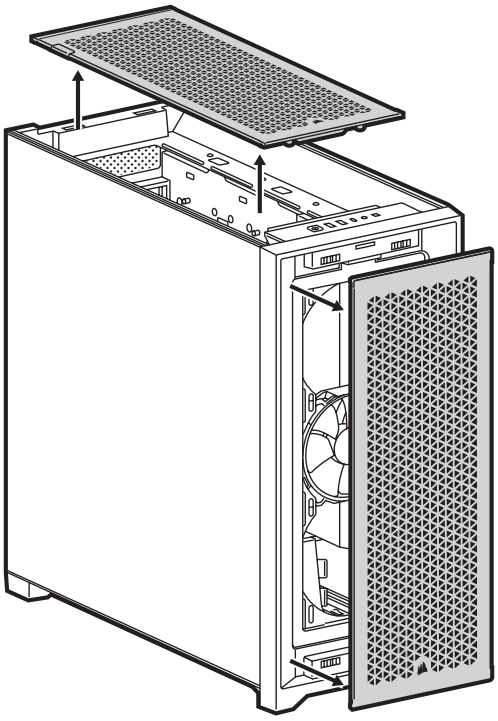

PANEELIEN PÄIVITYS

4000D AIRFLOW (PUU) ETU- JA YLÄPANEELIT

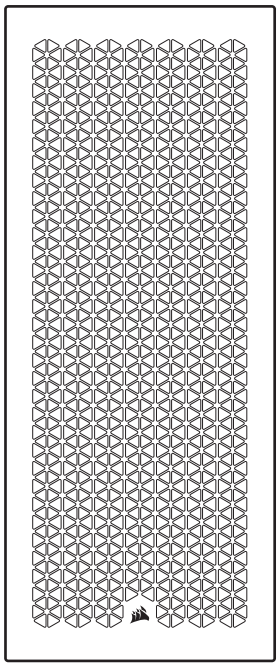

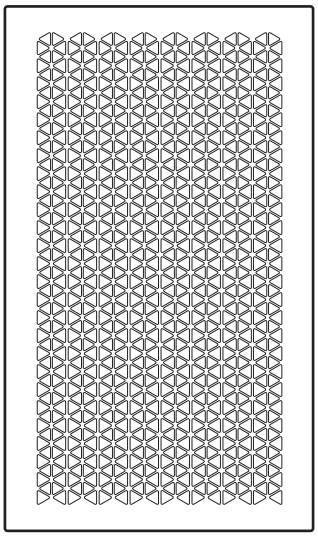

5000D AIRFLOW (PUU) ETU- JA YLÄPANEELIT

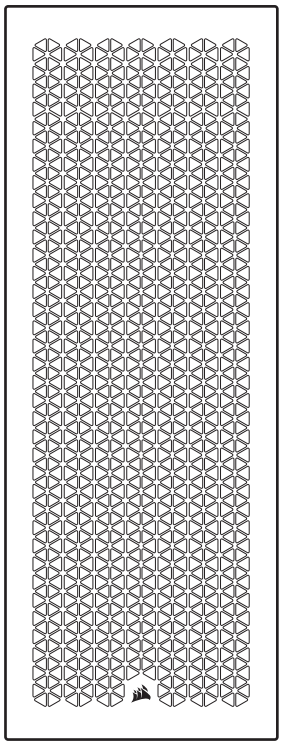

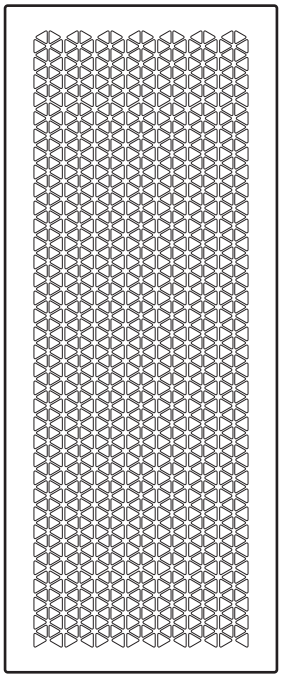

ETU- JA YLÄPANEELIEN IRROTUS

4000D-PANEELIT

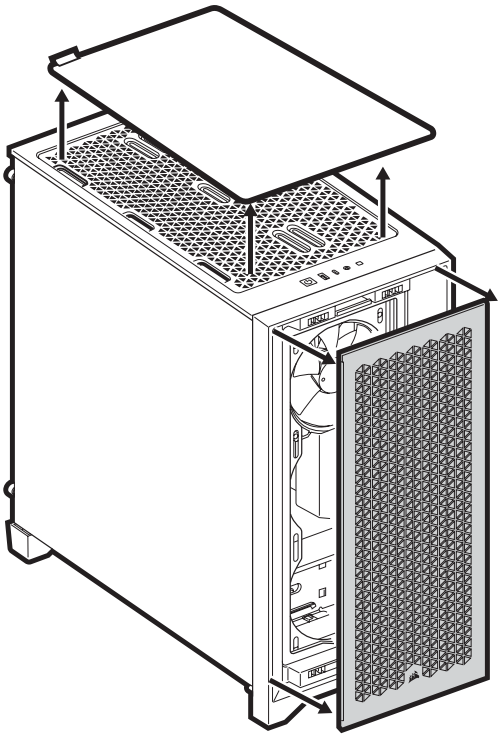

5000D-PANEELIT

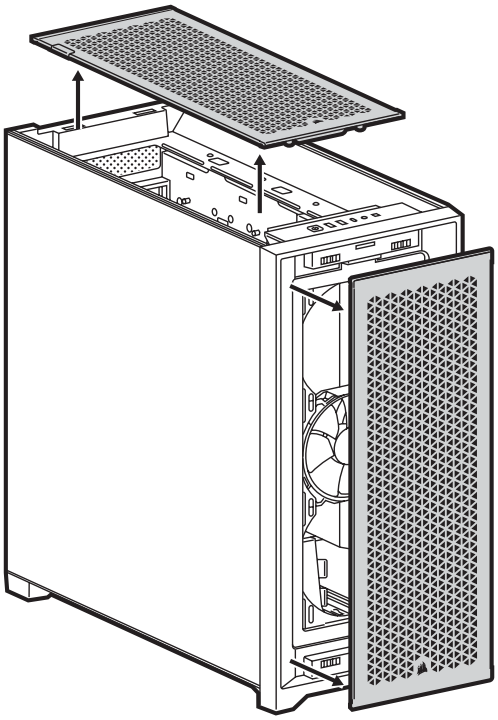

UPPGRADERA DINA PANELER

4000D AIRFLOW (TRÄTYP), FRONT- OCH TOPPANELER

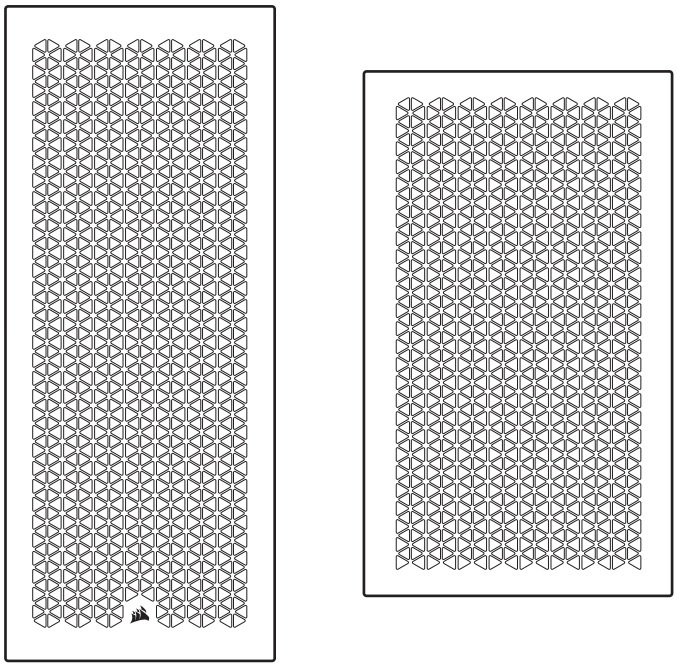

5000D AIRFLOW (TRÄTYP), FRONT- OCH TOPPANELER

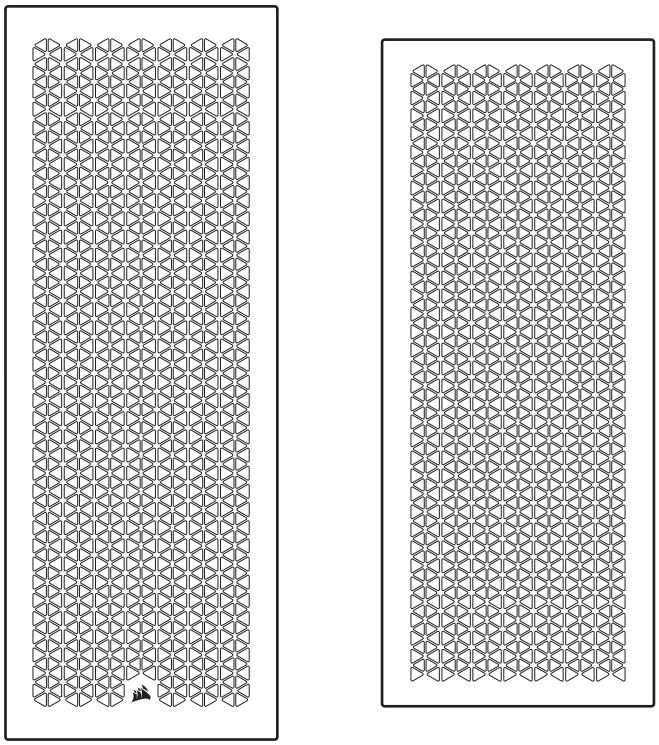

TA BORT FRONT- OCH TOPPANELER

4000D-PANELER

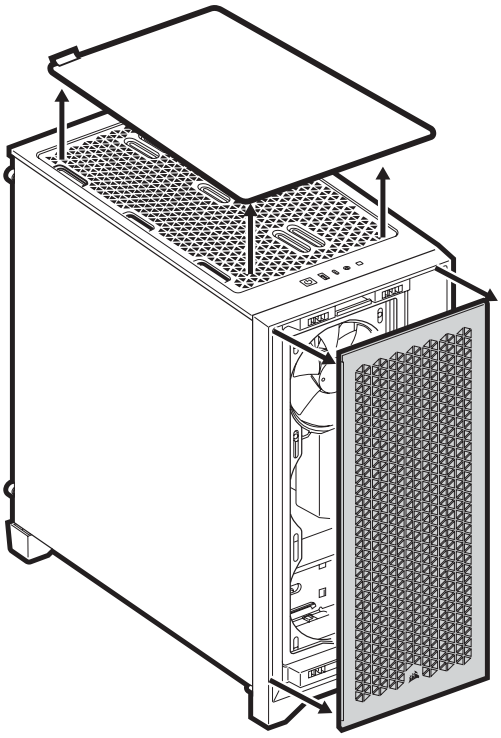

5000D-PANELER

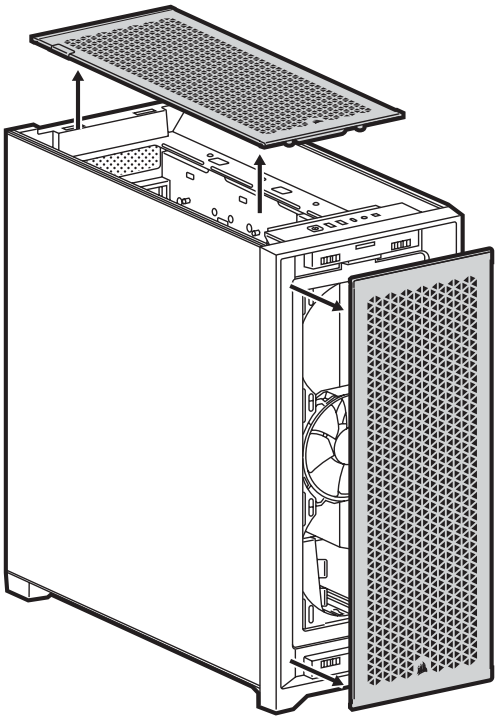

OPPGRADERE PANELENE DINE

4000D AIRFLOW (TRETYPE) FRONT- OG TOPPANELER

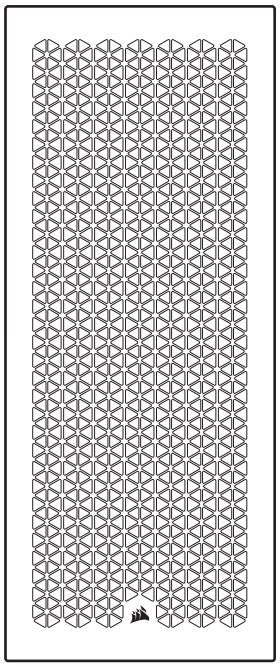

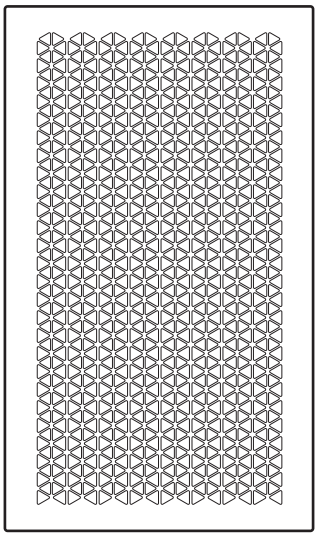

5000D AIRFLOW (TRETYPE) FRONT- OG TOPPANELER

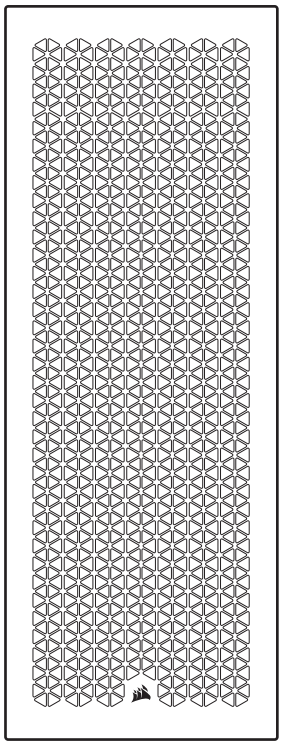

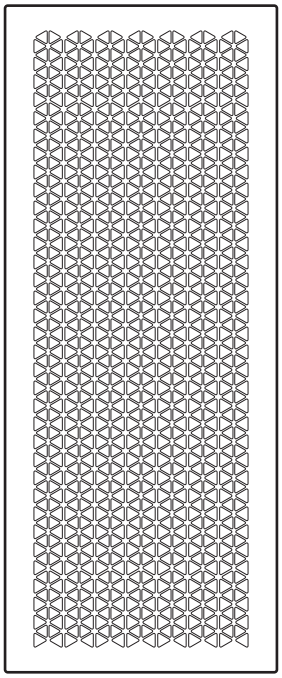

FJERNE FRONT- OG TOPPANELER

4000D PANELER

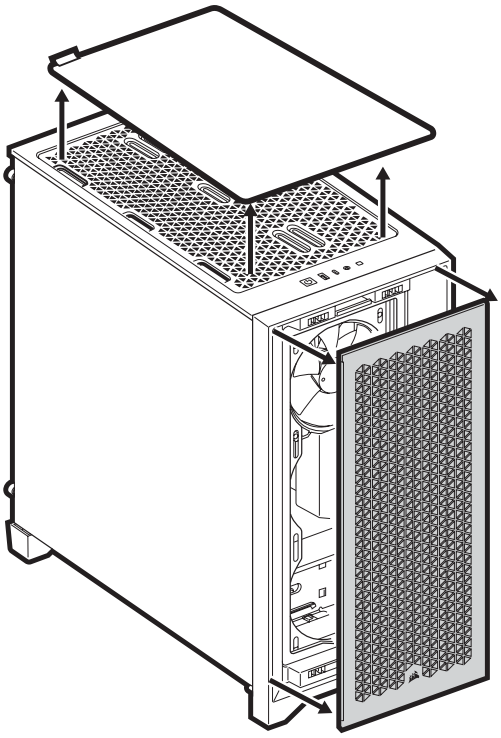

5000D PANELER

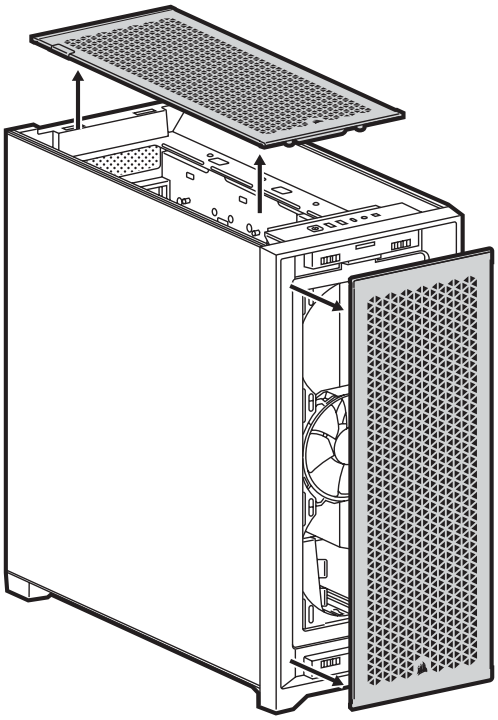

AGGIORNAMENTO DEI PANNELLI

PANNELLI ANTERIORE E SUPERIORE 4000D AIRFLOW (WOOD TYPE)

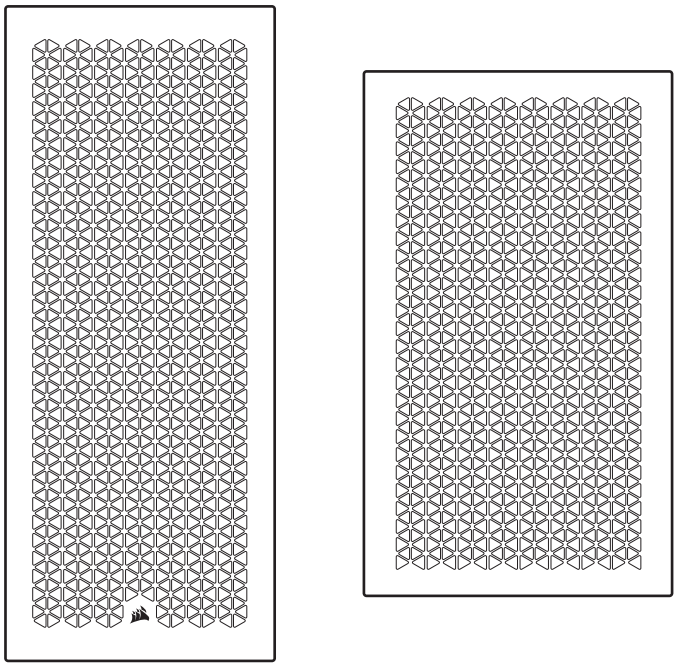

PANNELLI ANTERIORE E SUPERIORE 5000D AIRFLOW (WOOD TYPE)

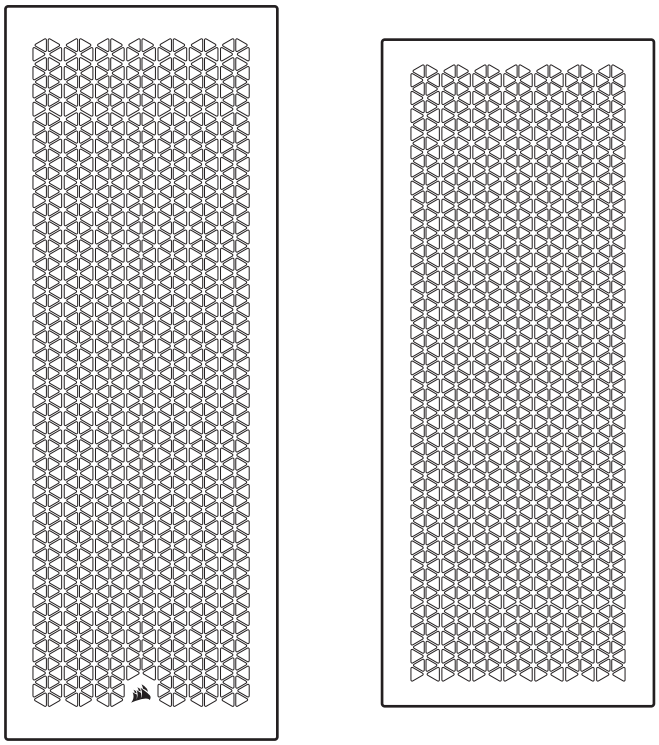

RIMOZIONE DEI PANNELLI ANTERIORE E SUPERIORE

PANNELLI 4000D

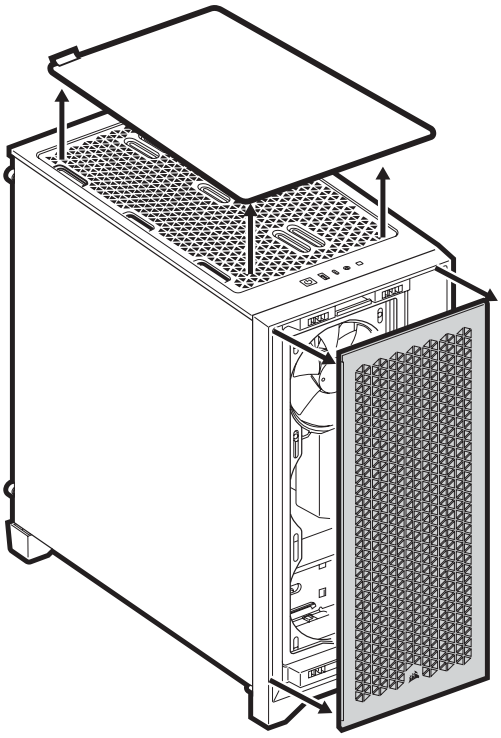

PANNELLI 5000D

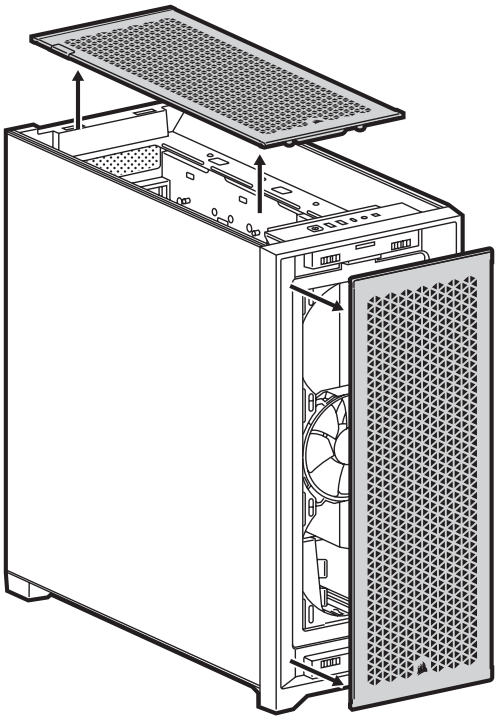

ACTUALIZACIÓN DE SUS PANELES

PANELES FRONTAL Y SUPERIOR 4000D AIRFLOW (EN MADERA)

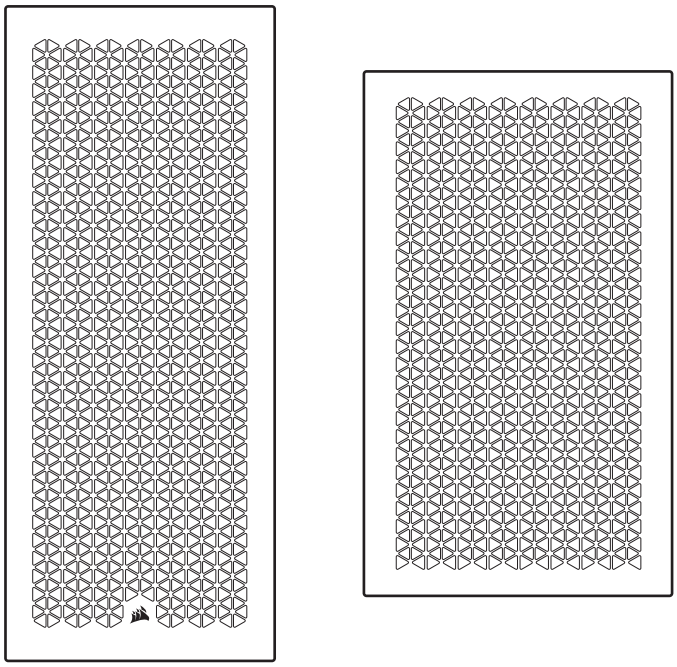

PANELES FRONTAL Y SUPERIOR 5000D AIRFLOW (EN MADERA)

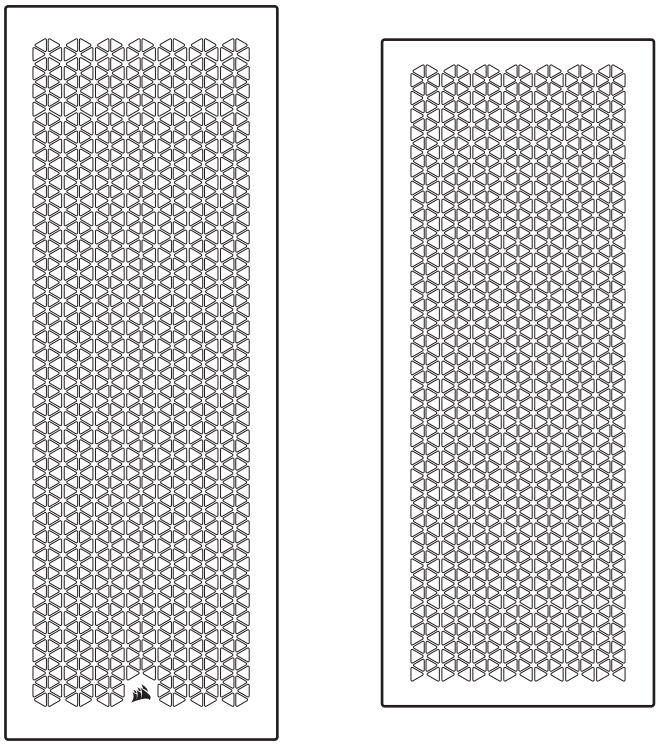

EXTRACCIÓN DE LOS PANELES FRONTAL Y SUPERIOR

PANELES 4000D

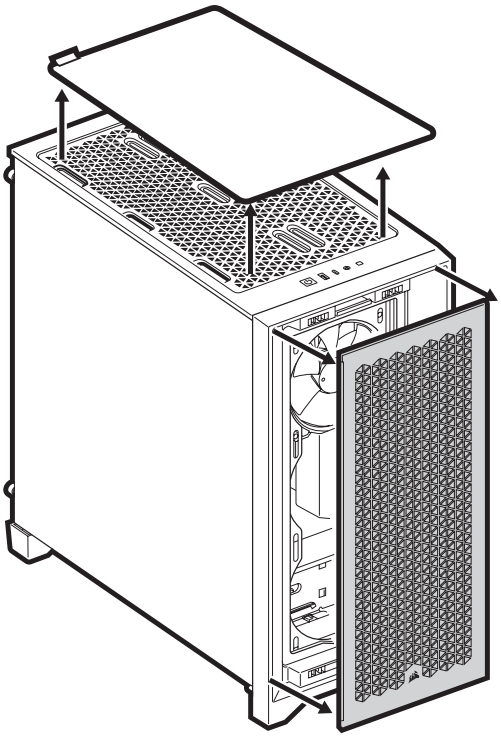

PANELES 5000D

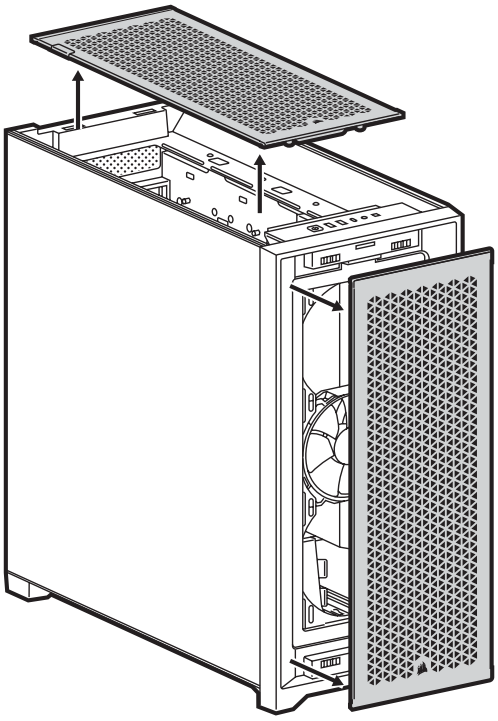

UPGRADE DOS PAINÉIS

PAINÉIS FRONTAL E SUPERIOR DO 4000D AIRFLOW (MADEIRA)

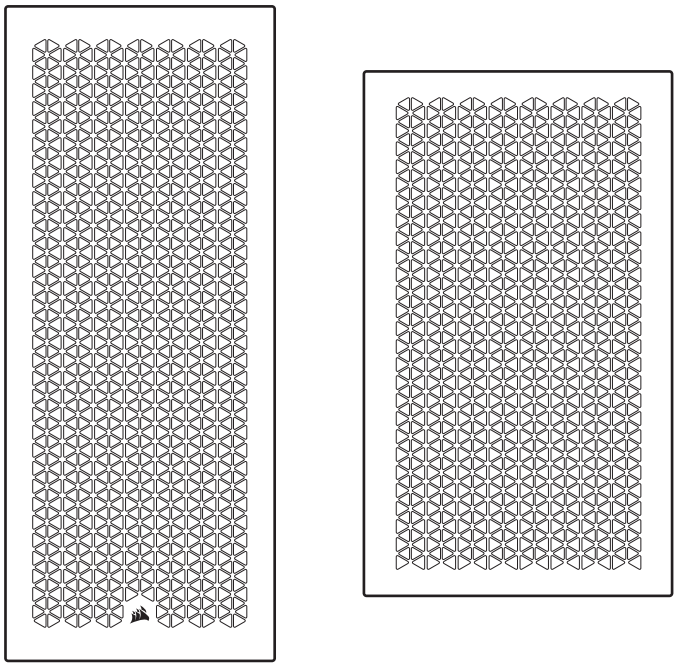

PAINÉIS FRONTAL E SUPERIOR DO 5000D AIRFLOW (MADEIRA)

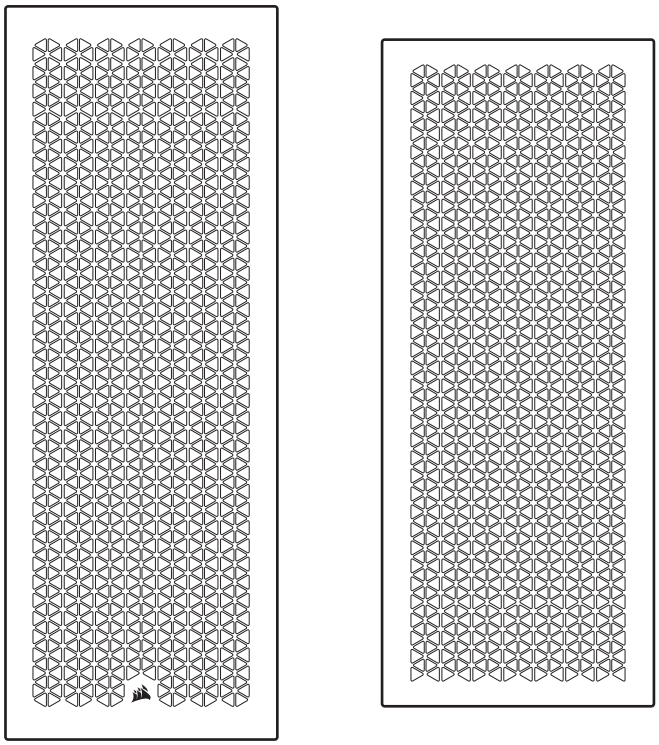

REMOÇÃO DOS PAINÉIS FRONTAL E SUPERIOR

PAINÉIS DO 4000D

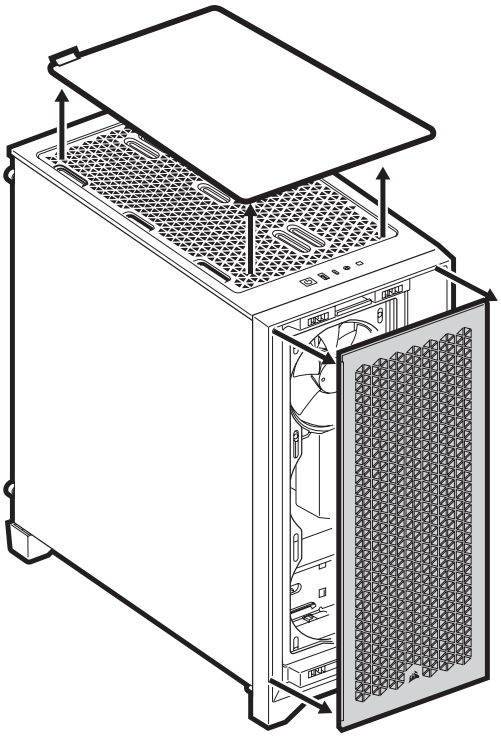

PAINÉIS DO 5000D

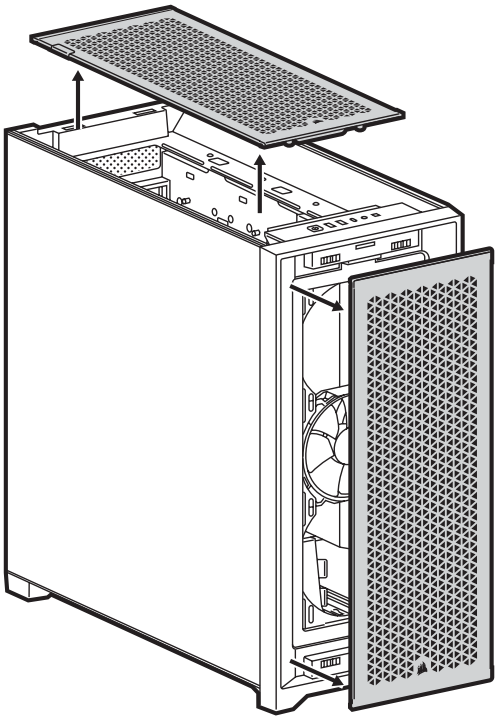

MODERNIZACJA PANELI

PRZEDNI I GÓRNY PANEL 4000D AIRFLOW (TYP DREWNIANY)

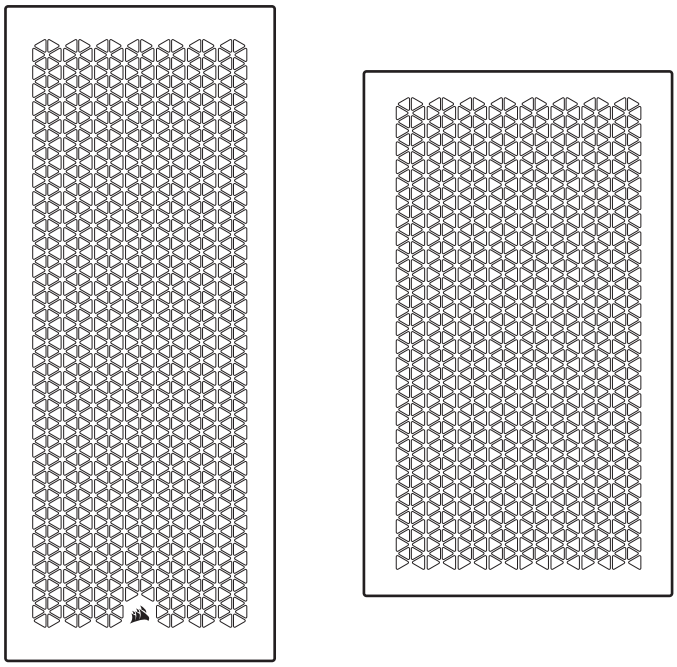

PRZEDNI I GÓRNY PANEL 5000D AIRFLOW (TYP DREWNIANY)

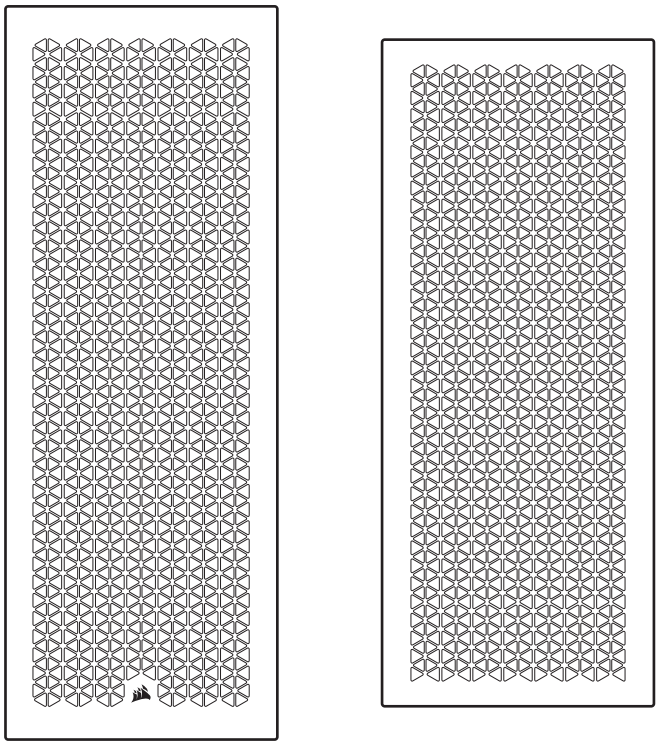

ZDEJMOWANIE PRZEDNIEGO I GÓRNEGO PANELU

PANELE 4000D

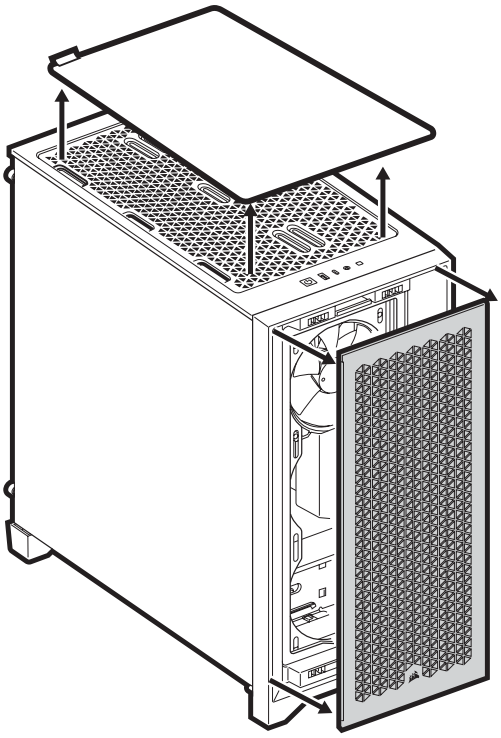

PANELE 5000D

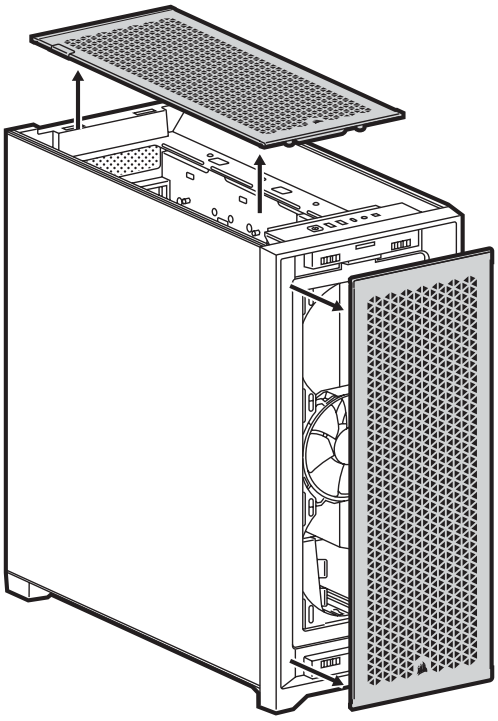

ОБНОВЛЕНИЕ ПАНЕЛЕЙ

ПЕРЕДНЯЯ И ВЕРХНЯЯ ПАНЕЛИ 4000D AIRFLOW (ПОД ДЕРЕВО)

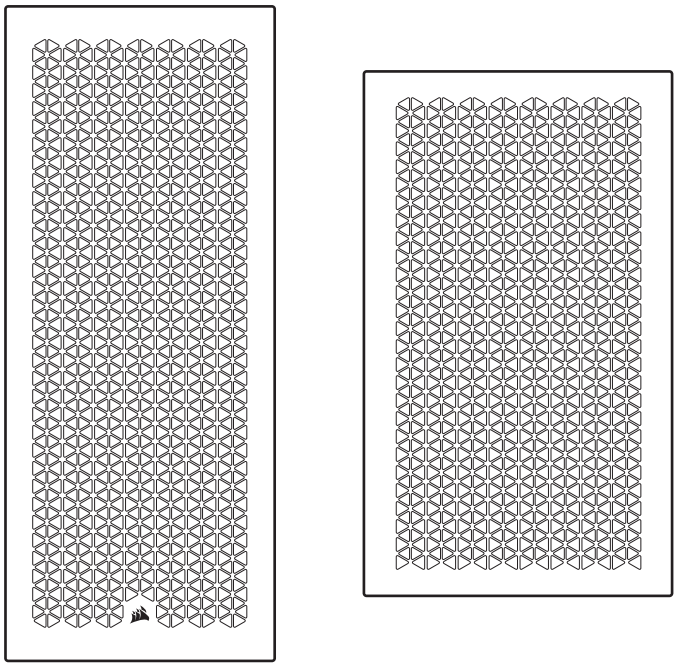

ПЕРЕДНЯЯ И ВЕРХНЯЯ ПАНЕЛИ 5000D AIRFLOW (ПОД ДЕРЕВО)

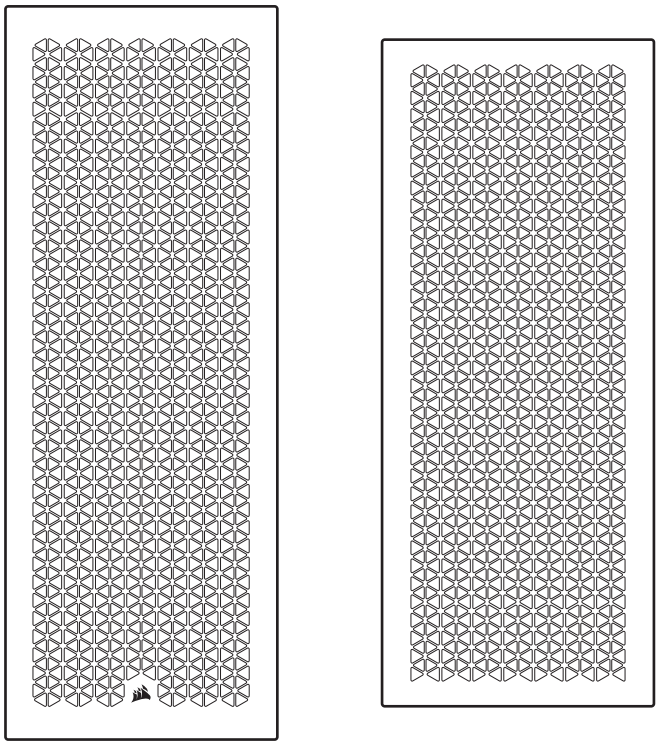

СНЯТИЕ ПЕРЕДНЕЙ И ВЕРХНЕЙ ПАНЕЛЕЙ

ПАНЕЛИ 4000D

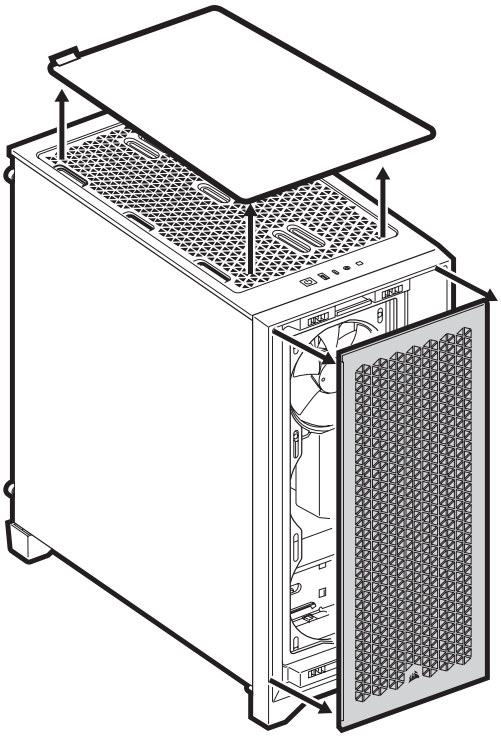

ПАНЕЛИ 5000D

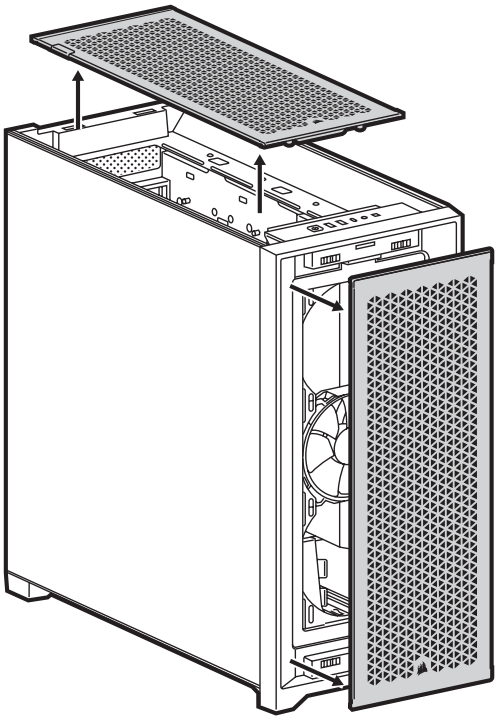

升级您的面板

4000D AIRFLOW（木制）前面板和顶部面板

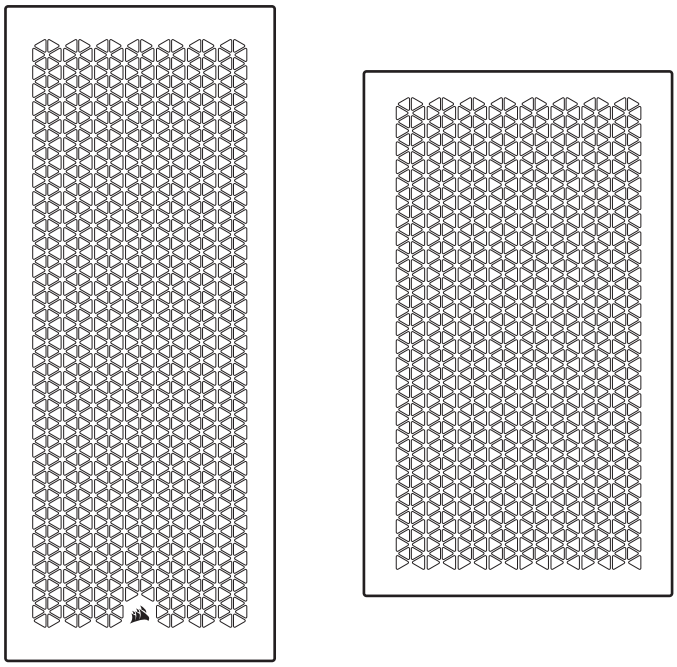

5000D AIRFLOW（木制）前面板和顶部面板

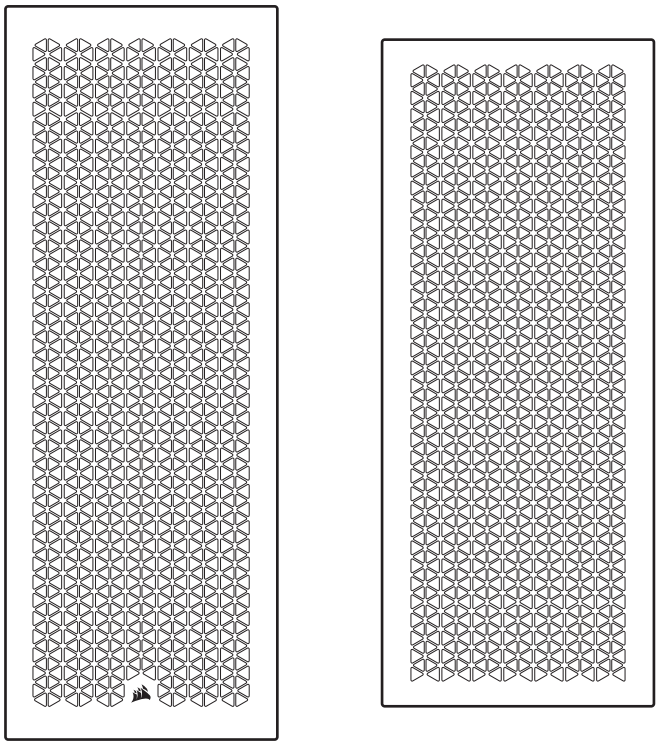

拆下前面板和顶部面板

4000D 面板

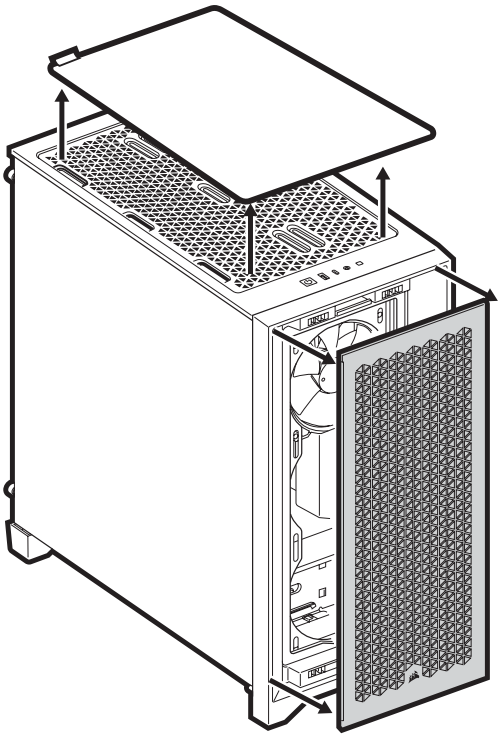

5000D 面板

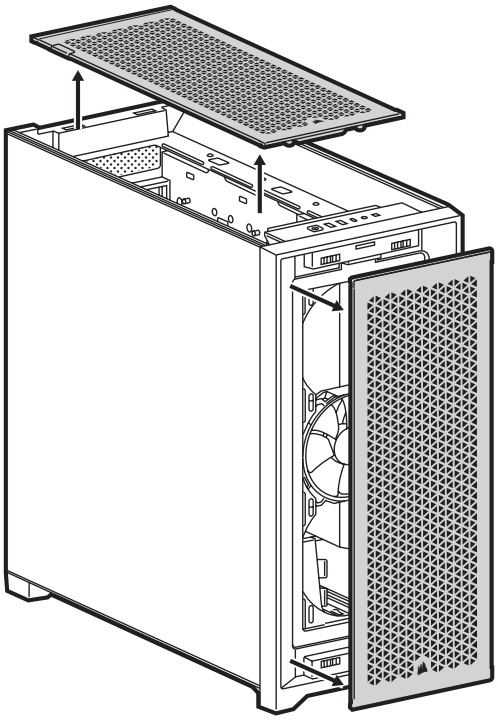

升級面板

4000D AIRFLOW (木頭類型) 前側和頂端面板

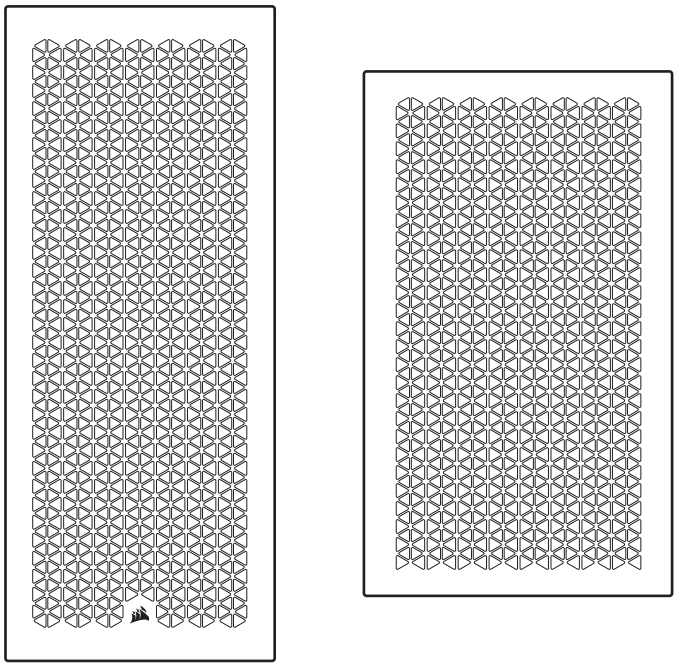

5000D AIRFLOW (木頭類型) 前側和頂端面板

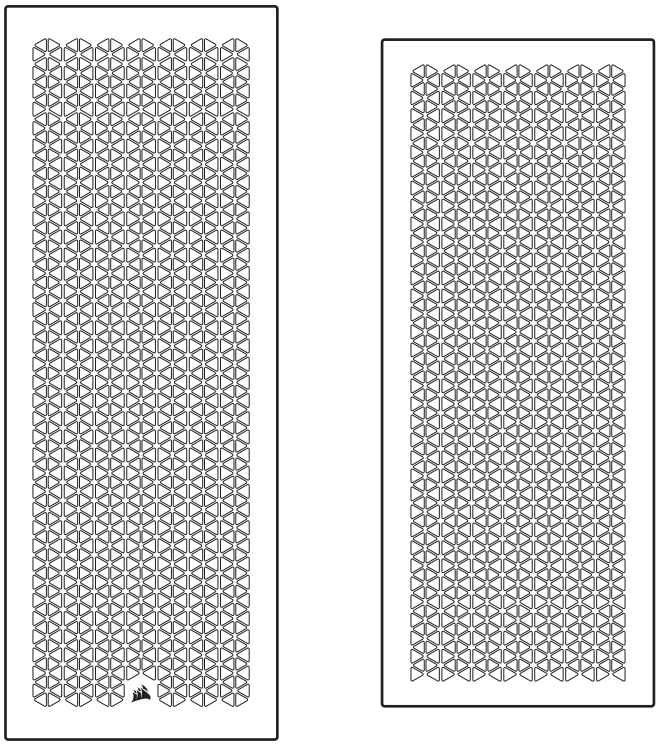

拆下前側和頂端面板

4000D 面板

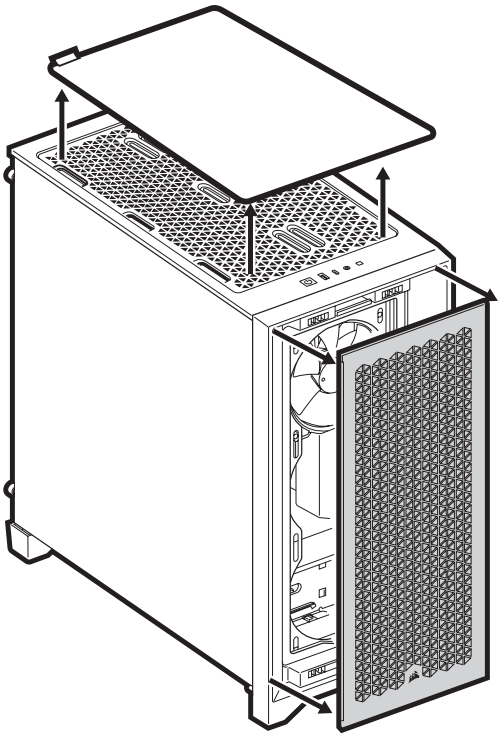

5000D 面板

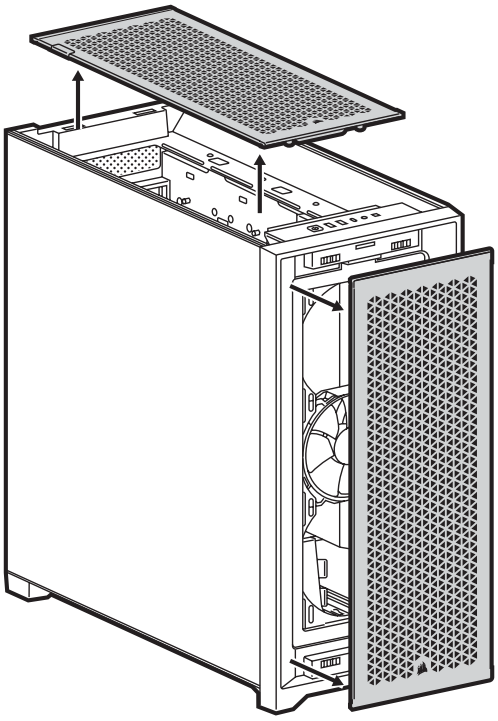

パネルのアップグレード

4000D エアフロー（ウッドタイプ）フロントパネルとトップパネル

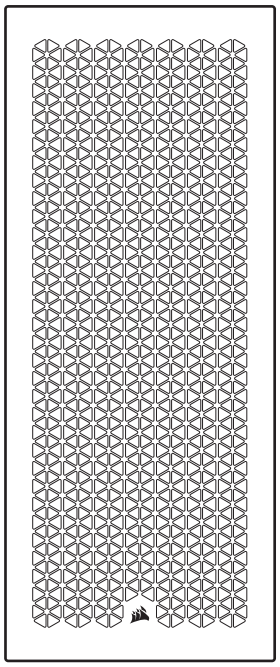

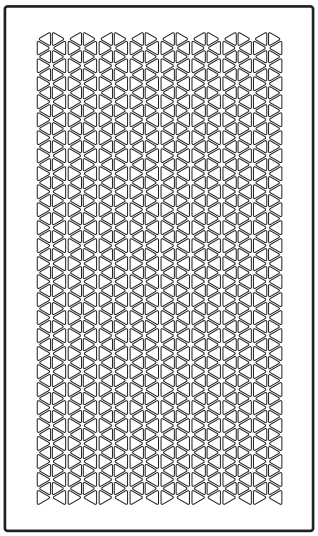

5000D エアフロー（ウッドタイプ）フロントパネルとトップパネル

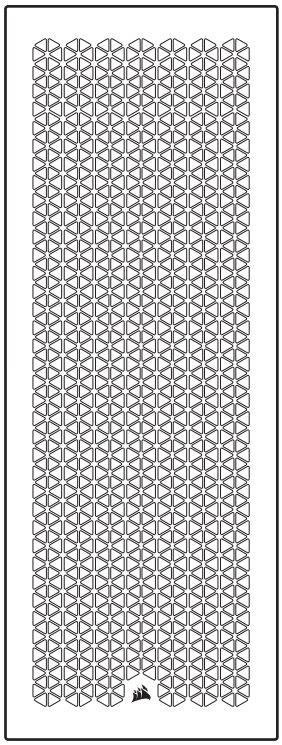

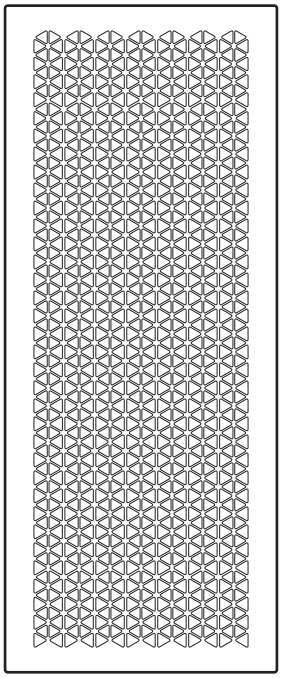

フロントパネルとトップパネルの取り外し

4000D パネル

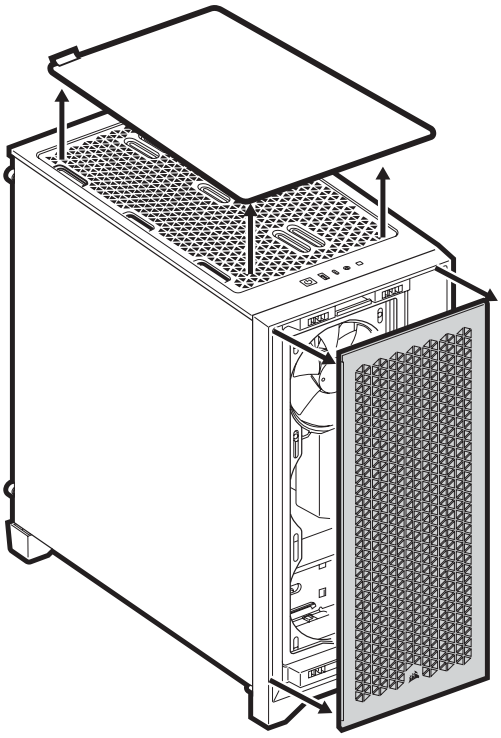

5000D パネル

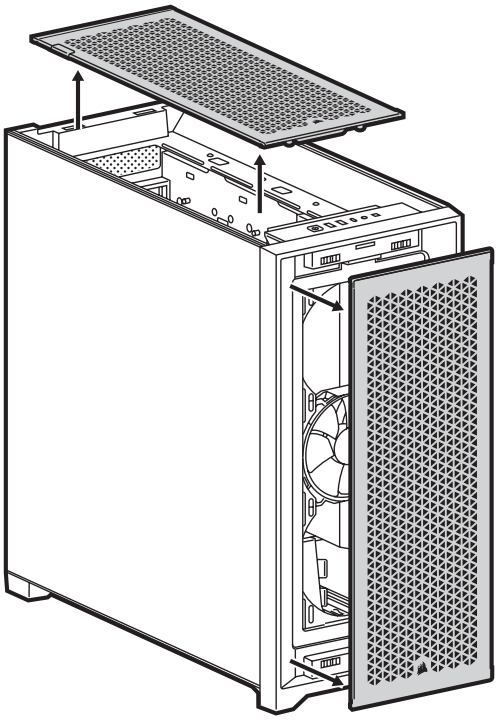

패널 업그레이드

4000D 공기 흐름(우드 타입) 전면 및 상부 패널

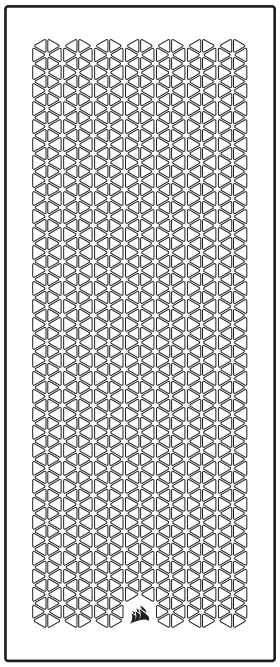

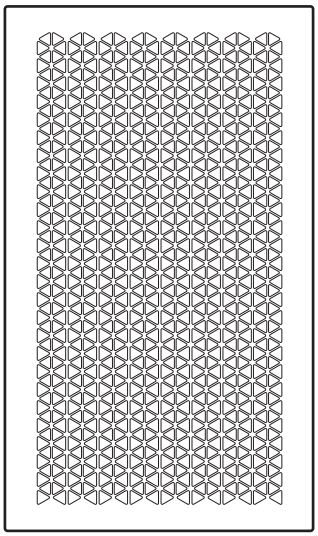

5000D 공기 흐름(우드 타입) 전면 및 상부 패널

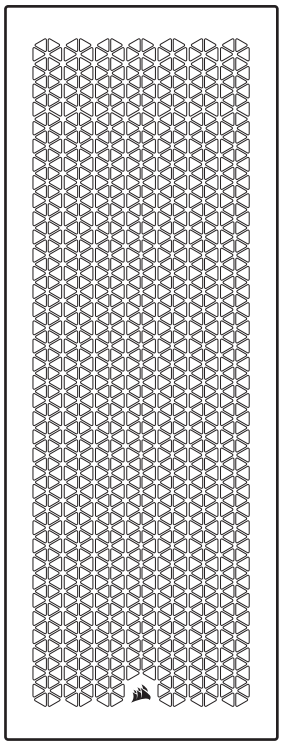

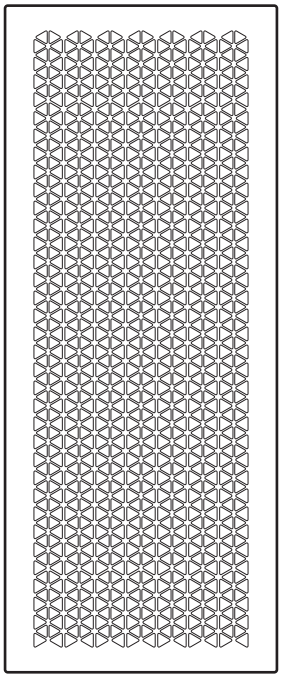

전면 및 상부 패널 제거

4000D 패널

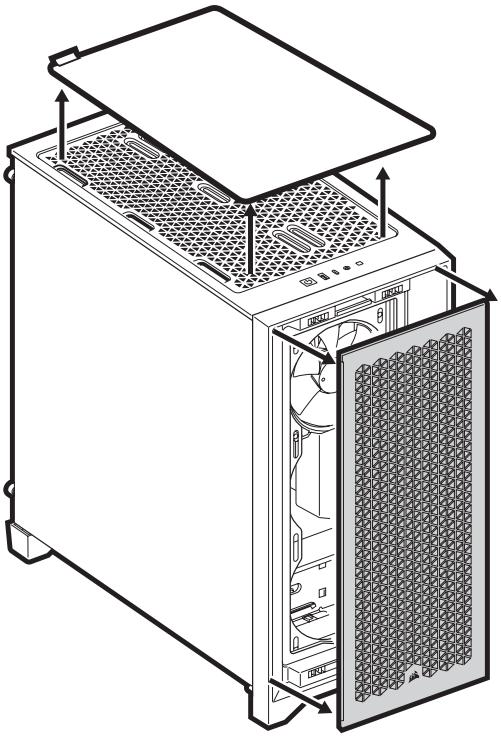

5000D 패널

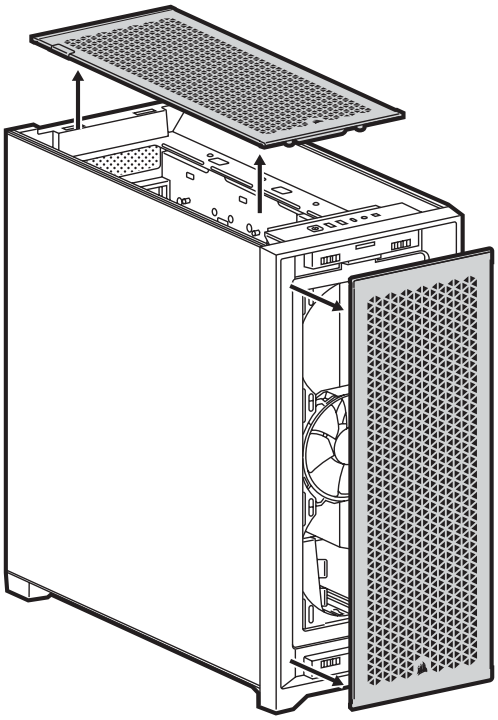

Web: corsair.com
Phone: (888) 222-4346
Warranty: corsair.com/support/warranty
Support: support.corsair.com
Blog: corsair.com/blog
Forum: forum.corsair.com
YouTube: youtube.com/corsairhowto

© 2022 CORSAIR MEMORY, Inc. All rights reserved. CORSAIR and the sails logo are registered trademarks of CORSAIR in the United States and/or other countries. All other trademarks are the property of their respective owners. Product may vary slightly from those pictured.
49-002633 AA

LOCAL COUNTRY REGULATIONS ARE APPLICABLE
CORSAIR GUARANTEE 2 YEARS